WM-FS493/FS495

SERVICE MANUAL

US Model
WM-FS493/FS495
Canadian Model
AEP Model
UK Model
E Model
WM-FS493

Photo : WM-FS495

Model Name Using Similar Mechanism	WM-FX433/FX435
Tape Transport Mechanism Type	MF-WMFX433-114

SPECIFICATIONS

Radio Frequency

FM: 87.5 – 108 MHz (0.1 MHz step)
(US, Canadian model)
87.5 – 108 MHz (0.05 MHz step)
(AEP, UK, Italian, E, Saudi Arabia model)
65 – 74 MHz, 87.5 – 108 MHz (0.05 MHz step)
(East Eupopean model)
AM: 530 – 1,710 kHz (10 kHz step)
(US, Canadian model)
531 – 1,602 kHz (9 kHz step)
(EXCEPT US, Canadian model)
TV: 2 – 13 channel
(FS495 model)

Power Requirements

3 V DC Batteries AA (R6) × 2

Battery Life

(approximate hours when using the batteries specified below)

	Sony Alkaline AM3 (N)		Sony SUM-3 (NS)	
	FS493	FS495	FS493	FS495
Playback	18	18	8.5	8.5
Radio	30	25	15	12

Dimensions

98.3 x 117.4 x 40.9 mm (3⅞ x 4⅝ x 1⅝ in.) (w/h/d)
incl. projecting parts

Mass 265 g (9.4 oz) incl. batteries

Supplied Accessories

– Stereo headphones (1) – Belt clip (1)
– Hand strap (1) (FS493 : Canadian model/FS495)
– Strap loop (1) (FS493 : Canadian model/FS495)

Design and specifications are subject to change without notice.

使用時は添付資料も参照のこと
Refer to the additional documents.

RADIO CASSETTE PLAYER

SONY

TABLE OF CONTENTS

Section	Title	Page
SECTION 1. SERVICE NOTE		3
SECTION 2. GENERAL		4
SECTION 3. DISASSEMBLY		
3-1.	Cover	5
3-2.	Display Board	5
3-3.	Cassette Lid Assembly	5
3-4.	Chassis Assembly	6
3-5.	Main Board and Mechanism Deck	6
SECTION 4. ADJUSTMENTS		
4-1.	Mechanical Adjustments	7
4-2.	Electrical Adjustments	7
SECTION 5. DIAGRAMS		
5-1.	Block Diagram	11
5-2.	Schematic Diagram — Main Section —	14
5-3.	Printed Wiring Board — Main Section —	17
5-4.	Printed Wiring Board — Display Section —	21
5-5.	Schematic Diagram — Display Section —	25
SECTION 6. EXPLODED VIEWS		
6-1.	Cassette lid and Display Board Section	28
6-2.	Rear Cabinet and Main Board Section	29
6-3.	Mechanism Section (MF-WMFX433-114)	30
SECTION 7. ELECTRICAL PARTS LIST		31

Notes on chip component replacement

- Never reuse a disconnected chip component.
- Notice that the minus side of a tantalum capacitor may be damaged by heat.

Flexible Circuit Board Repairing

- Keep the temperature of the soldering iron around 270 °C during repairing.
- Do not touch the soldering iron on the same conductor ofthe circuit board (within 3 times).
- Be careful not to apply force on the conductor when soldering or unsoldering.

SECTION 1
SERVICE NOTE

WATERPROOFED SECTION

NOTE : In case the parts in the figure are removed for repair, treat them to protect from water drop following the instructions in the figure (spread grease, bond etc.).

• Sony grease SGL-601 : 7-651-000-10

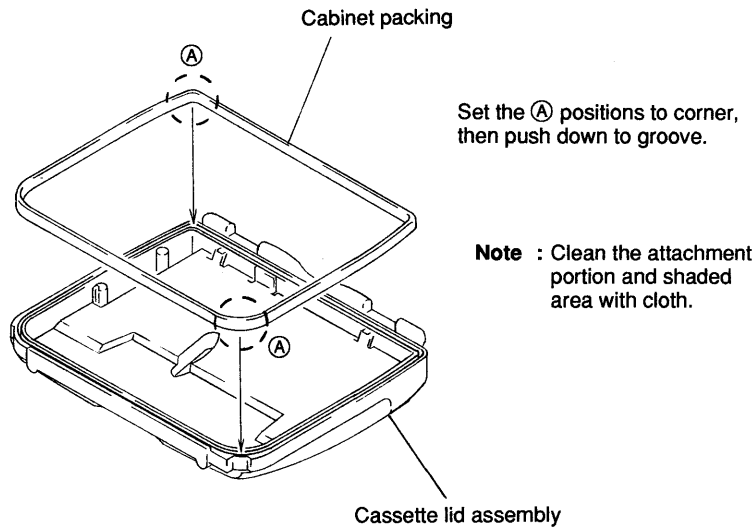

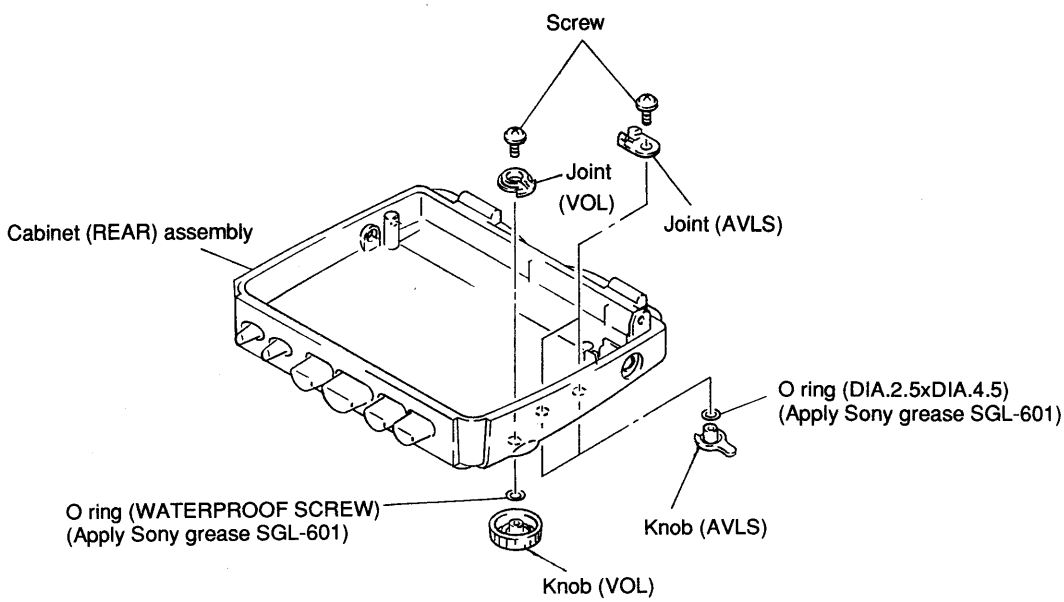

SECTION 2
GENERAL

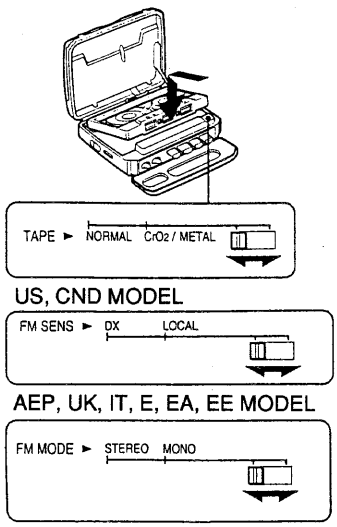

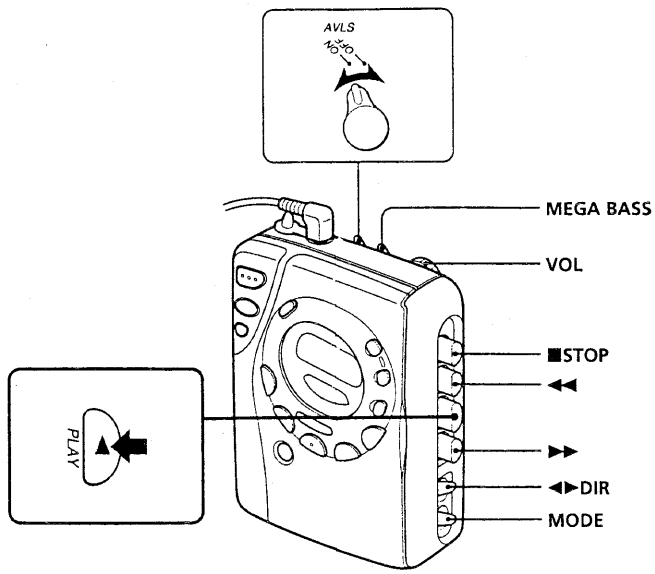

- Abbreviation
  CND : Canadian model.
  IT : Italian model.
  EA : Saudi Arabia model.
  EE : East European model.

MEGA BASS
For deep and powerful sound.
Pour un son puissant et retentissant.

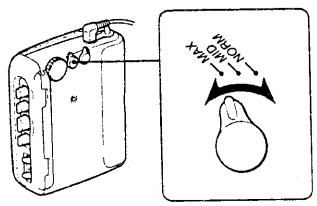

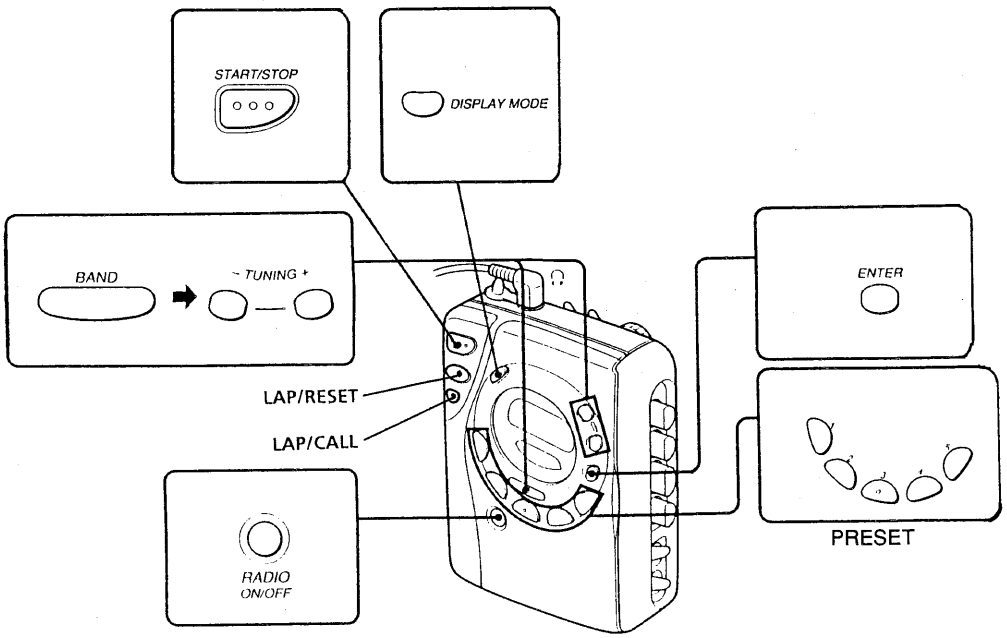

SECTION 3
DISASSEMBLY

Note : Follow the disassembly procedure in the numerical order given.

3-1. COVER

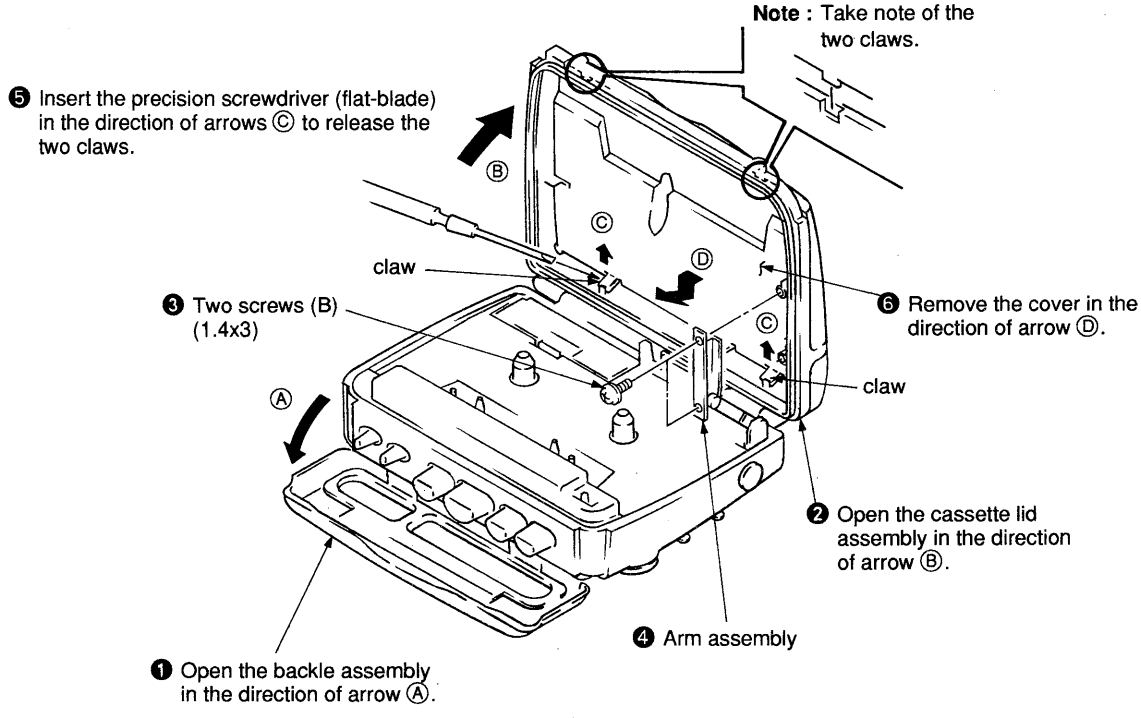

3-2. DISPLAY BOARD

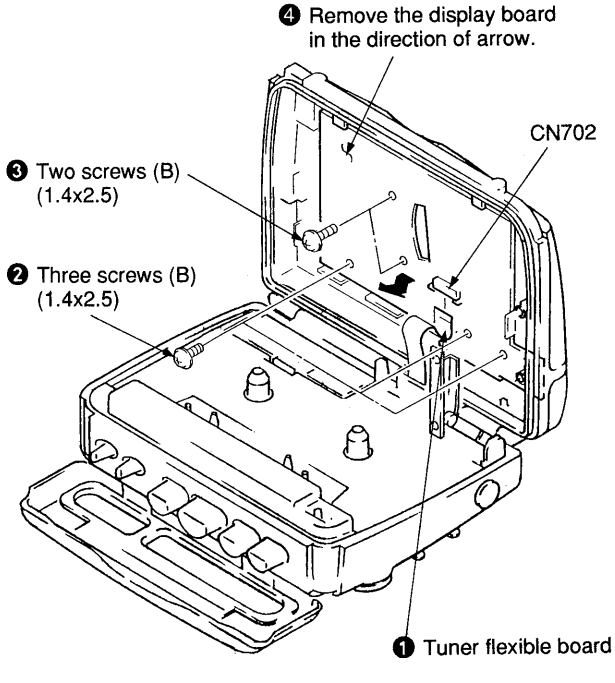

3-3. CASSETTE LID ASSEMBLY

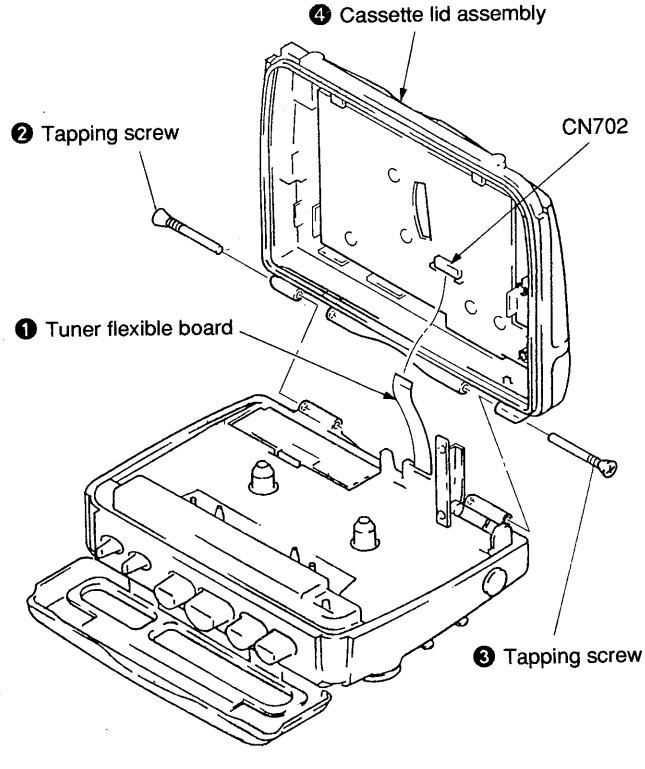

3-4. CHASSIS ASSEMBLY

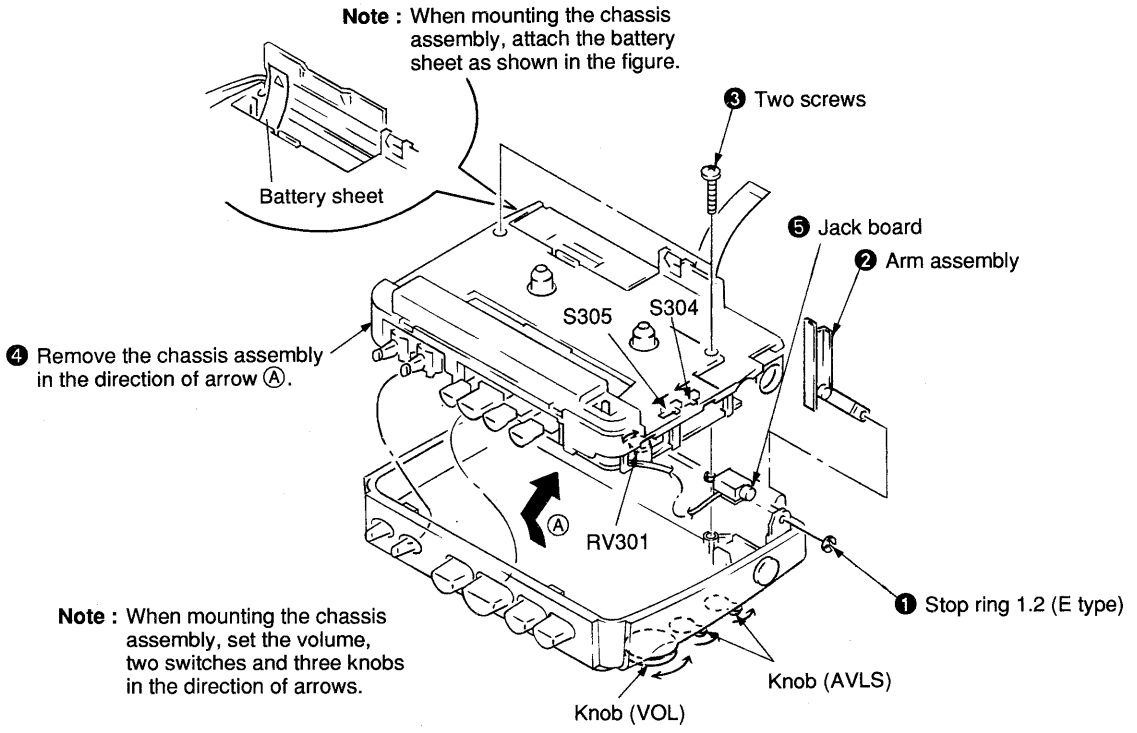

3-5. MAIN BOARD AND MECHANISM DECK

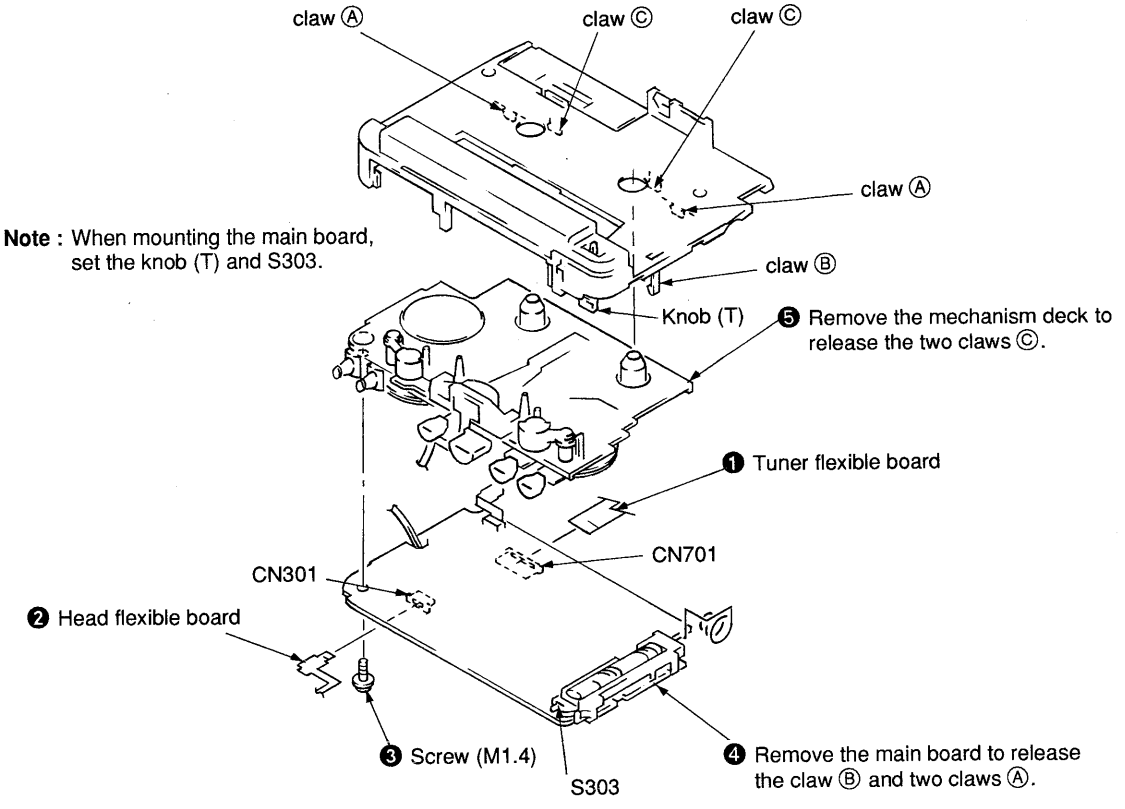

SECTION 4
ADJUSTMENTS

4-1. MECHANICAL ADJUSTMENTS

PRECAUTION

1. Clean the following parts with a denatured-alcohol-moistened swab :
   playback head　　pinch roller
   capstan　　rubber belts
2. Demagnetize the playback head with a head demagnetizer.
3. Do not use a magnetized screwdriver for the adjustments.
4. After the adjustments, apply suitable locking compound to the parts adjusted.
5. The adjustments should be performed with the rated power supply voltage (2.5V) unless otherwise noted.

Torque Measurement

Mode	Torque meter	Meter reading
FWD	CQ-102C	20 — 42 g • cm (0.28 — 0.58 oz • inch)
FWD Back Tension		less than 2 g • cm (less than 0.03 oz • inch)
REV	CQ-102RC	20 — 42 g • cm (0.28 — 0.58 oz • inch)
REV Back Tension		less than 2 g • cm (less than 0.03 oz • inch)
FF, REW	CQ-201B	more than 60 g • cm (more than 0.83 oz • inch)

4-2. ELECTRICAL ADJUSTMENTS

TAPE SECTION

PRECAUTION

- Supplied voltage : 2.5V
- Switch and control position
  TAPE switch : NORMAL
  MEGA BASS switch : NORM
  VOLUME control : maximum
  AVLS switch : OFF

Test Tape

Type	Signal	Used for
WS-48A	3 kHz, 0 dB	Tape Speed Adjustment

Tape speed adjustment

Procedure :

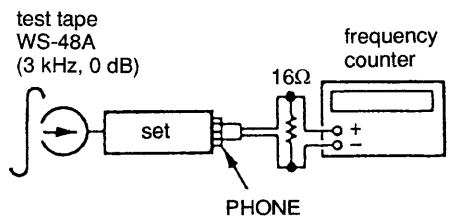

1. Play back WS-48A (tape center portion) in reverse mode. Adjust the RV601 so that the frequency counter reads 3,000Hz ± 10Hz.

Adjustment Location :

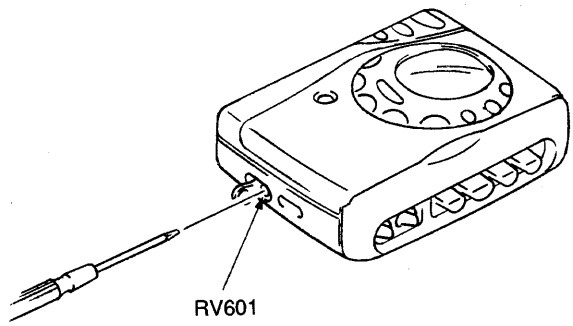

TUNER SECTION

FM SECTION

setting :
FUNCTION switch : RADIO
BAND switch : FM

FM TUNING VOLTAGE ADJUSTMENT

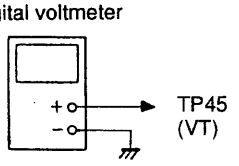

FM TUNING VOLTAGE ADJUSTMENT
Adjust for a 5.6 ± 0.03 (1.4 ± 0.03) Vdc reading on Digital voltmeter
L6
87.5 (65.0) MHz

( ) : East European model

FM TRACKING ADJUSTMENT

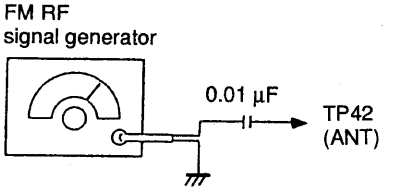

Modulation : 400Hz, 30%
Output level : as low as possible.

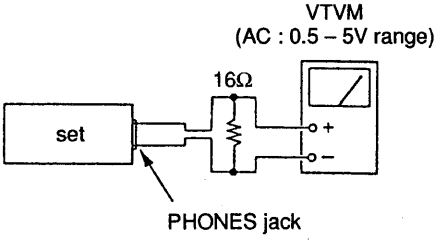

- Repeat the procedures in each adjustment several times, and the tracking adjustment should be finally done by the trimmer capacitors.

FM TRACKING ADJUSTMENT	
Adjust for a maximum reading on VTVM.	
L5	CT2
87.5 (65.0) MHz	108 MHz

( ) : East European model

VCO ADJUSTMENT

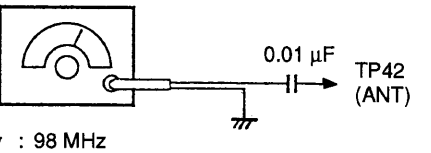

Carrier frequency : 98 MHz
Modulation : no modulation
Output level : 55 dB (562µV)

1. Connect the frequency counter to TP52 and GND as shown the figure below.
2. Turn the set to 98 MHz.
3. Adjust RV1 for 76 kHz ± 50 Hz reading on frequency counter.

[MAIN BOARD] (SIDE B)

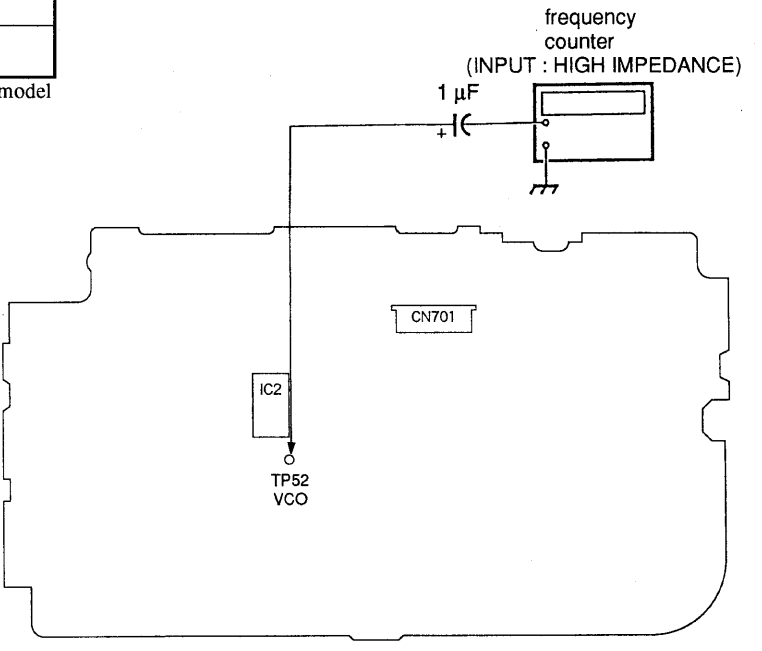

TV SECTION (FS495 model only)

setting :
FUNCTION switch : RADIO
BAND switch : TV

TV TUNING VOLTAGE ADJUSTMENT

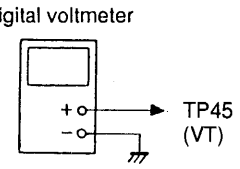

TV TUNING VOLTAGE ADJUSTMENT
Adjust for a 2.8 ± 0.03 Vdc reading on Digital voltmeter
L2
179.75 MHz (7ch)

TV TRACKING ADJUSTMENT

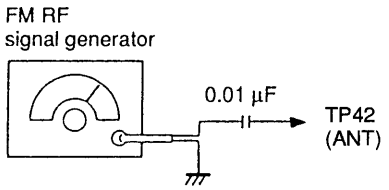

Modulation : 400Hz, 30%
Output level : as low as possible.

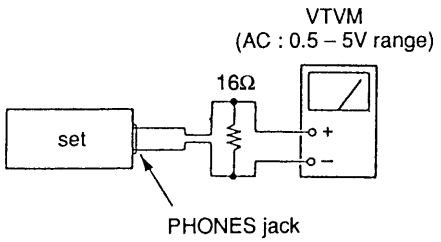

- Repeat the procedures in each adjustment several times, and the tracking adjustment should be finally done by the trimmer capacitors.

TV TRACKING ADJUSTMENT	
Adjust for a maximum reading on VTVM.	
L1	CT1
179.75 MHz	215.75 MHz (13ch)

AM SECTION

setting :
FUNCTION switch : RADIO
BAND switch : AM

AM TUNING VOLTAGE ADJUSTMENT

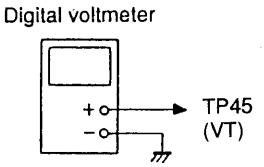

AM TUNING VOLTAGE ADJUSTMENT
Adjust for a 1.10 ± 0.03 Vdc reading on Digital voltmeter
L8
530 (531) kHz

( ) : EXCEPT US, Canadian model

AM IF ADJUSTMENT, AM TRACKING ADJUSTMENT

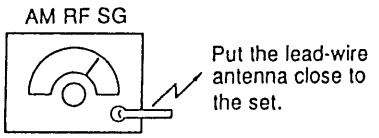

Modulation : 400Hz 30%
Ooutput level : as low as possible.

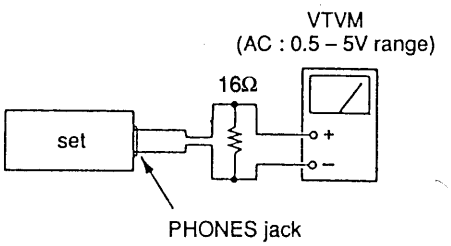

- Repeat the procedures in each adjustment several times, and the tracking adjustment should be finally done by the trimmer capacitors.

AM IF ADJUSTMENT
Adjust for a maximum reading on VTVM.
T1
1000 (999) kHz

( ) : EXCEPT US, Canadian model

AM TRACKING ADJUSTMENT	
Adjust for a maximum reading on VTVM.	
L7	CT3
620 (621) kHz	1400 (1395) kHz

( ) : EXCEPT US, Canadian model

Adjustment Part Location Diagram :

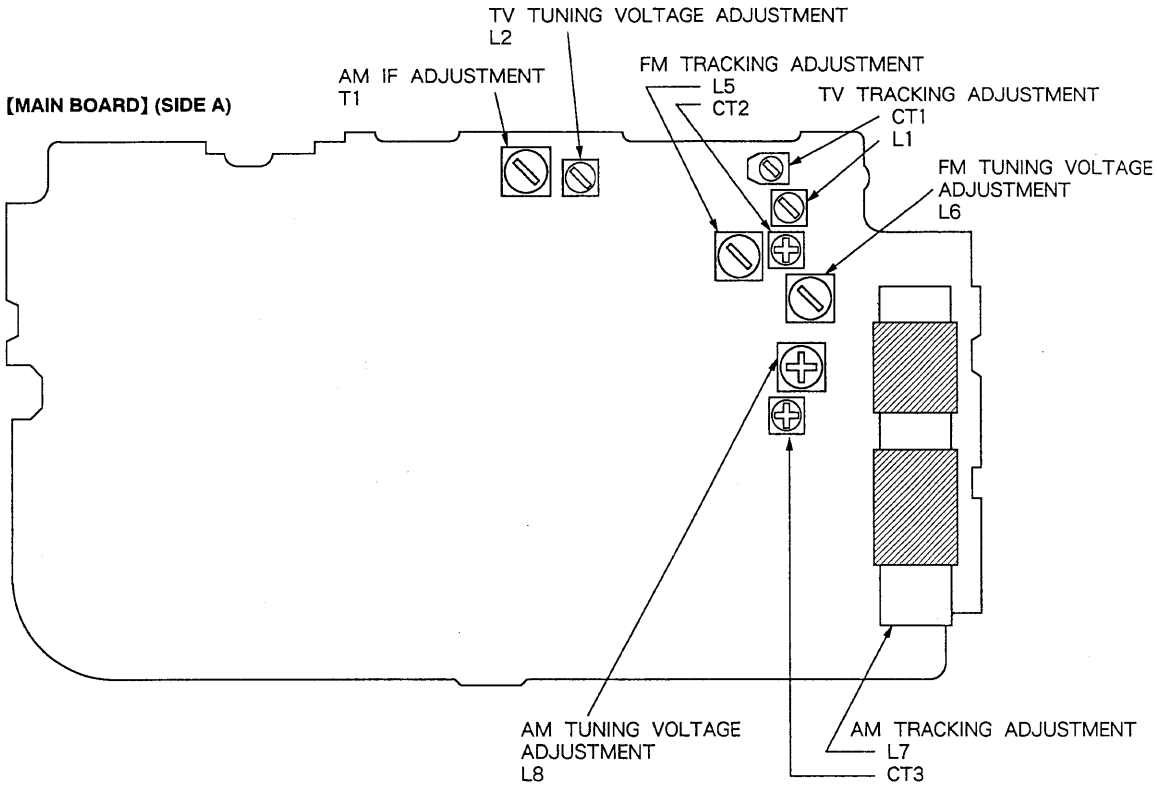

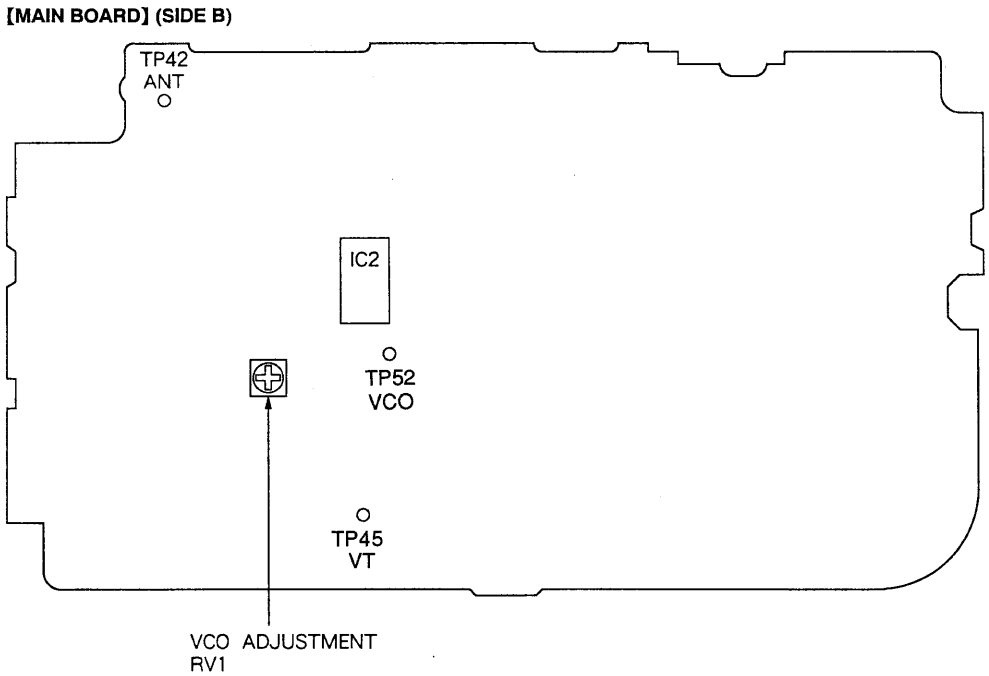

SECTION 5
DIAGRAMS

5-1. BLOCK DIAGRAM

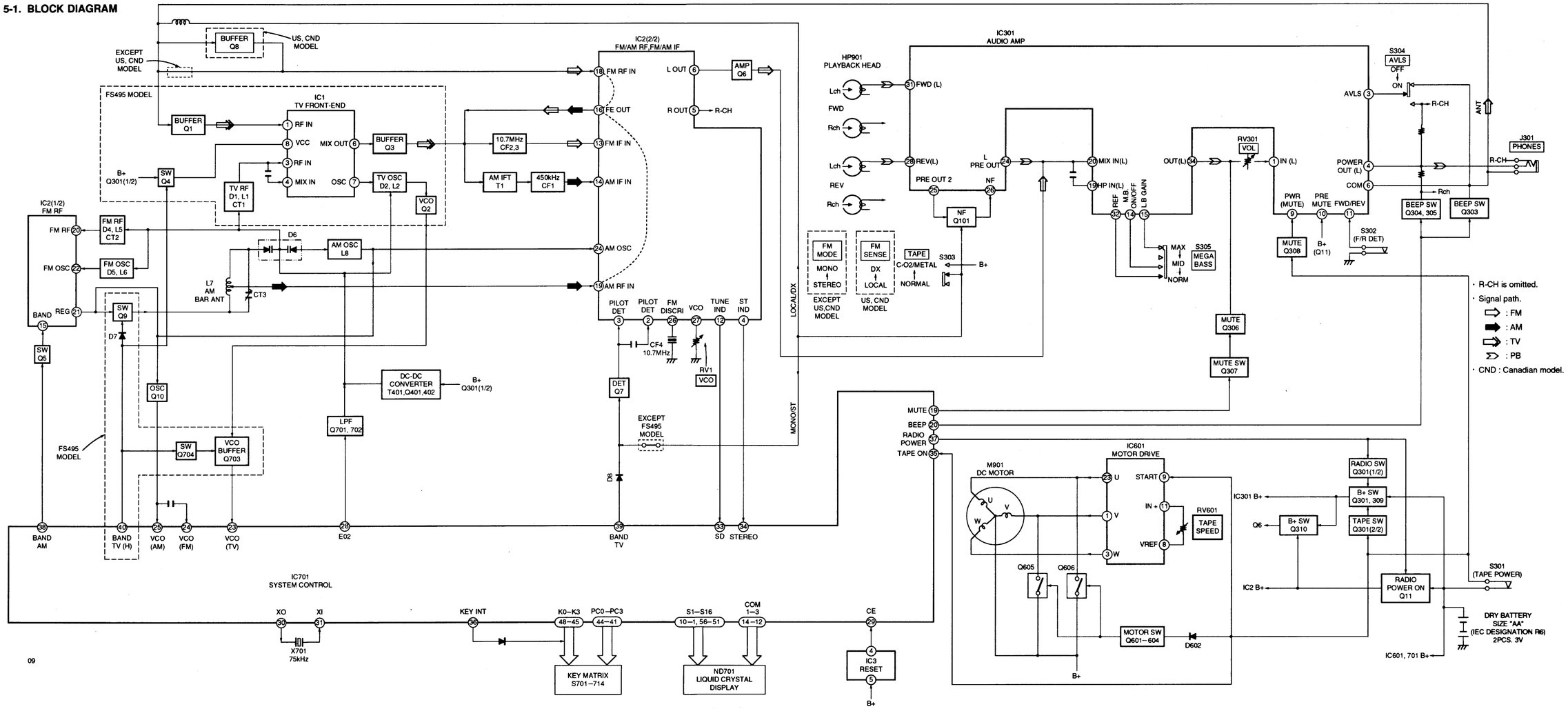

• IC Block Diagrams

IC1 TA7358F

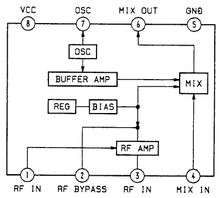

IC2 CX1538N

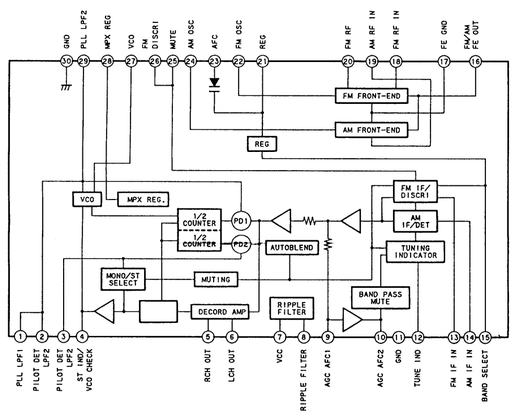

IC301 LA4585M

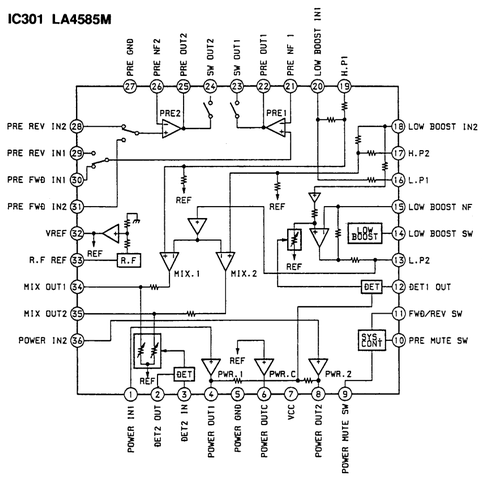

IC601 LB1674V

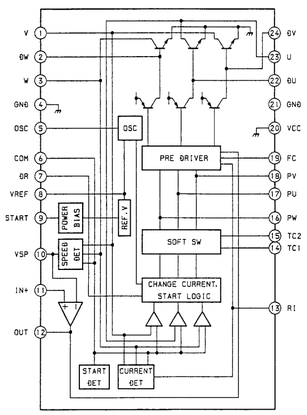

IC702 PST9119

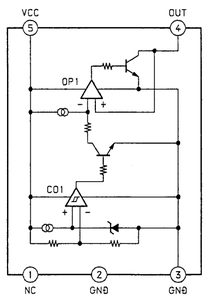

5-2. SCHEMATIC DIAGRAM — MAIN SECTION —

SEE ADDITIONAL INFORMATION

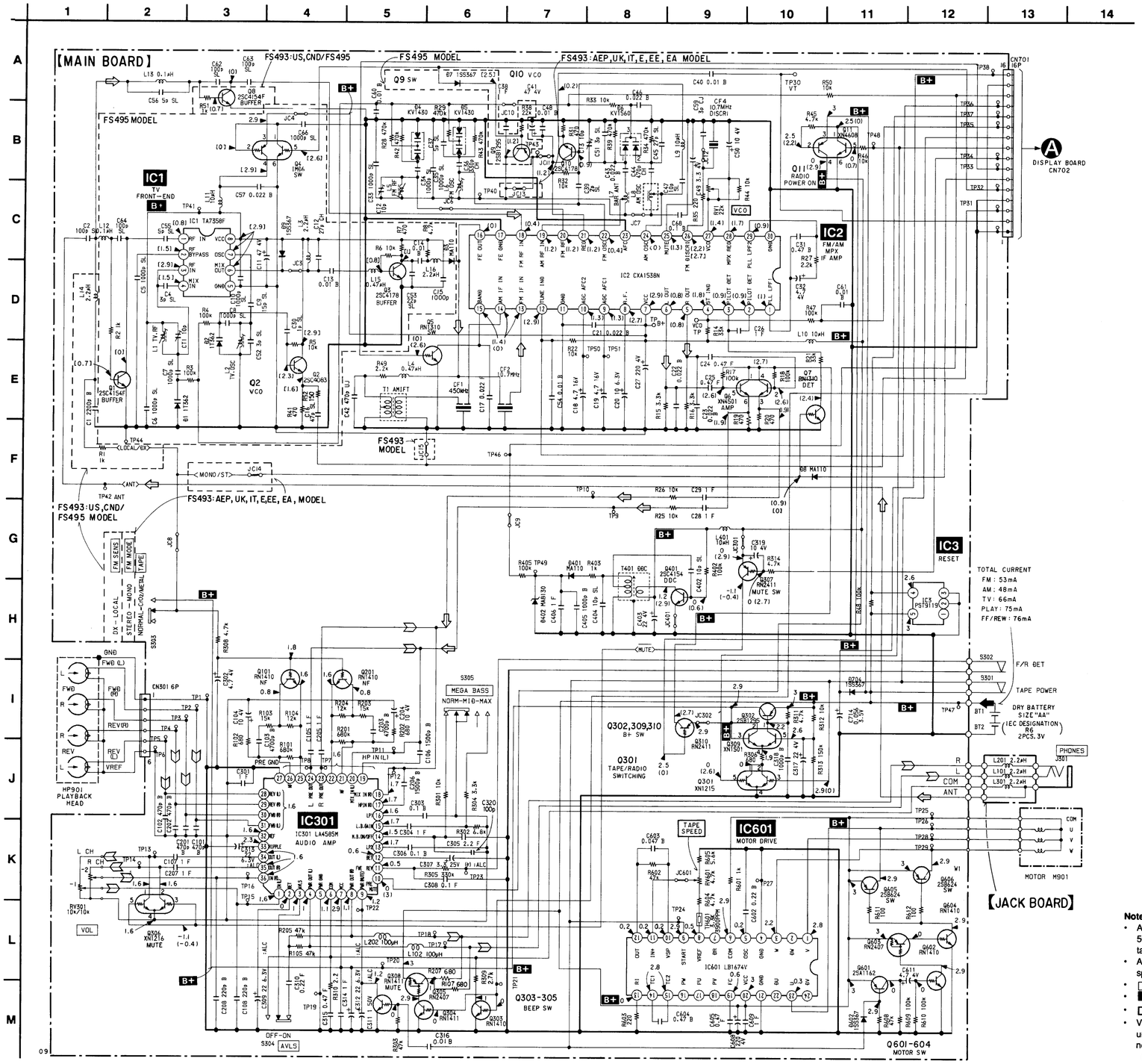

Note:

- All capacitors are in μF unless otherwise noted. pF:μμF 50WV or less are not indicated except for electrolytics and tantalums.
- All resistors are in Ω and 1/4W or less unless otherwise specified.
- ▭ : panel designation.
- B+ : B+ Line
- ▭ : adjustment for repair.
- Voltage and waveforms are dc with respect to ground under no-signal conditions.
  no mark : TAPE PLAY
  ( ) : FM
  < > : AM
  [ ] : TV (13ch)
- Voltages are taken with a VOM (Input impedance 10MΩ). Voltage variations may be noted due to normal production tolerances.
- Power voltage is dc 3.0V and fed with regulated dc power supply from BATTERY TERMINAL.
- Total current is measured with no cassette installed.
- Signal path.
  ⇨ : FM
  ⇨ : PB
- Abbreviation
  CND : Canadian model.
  IT : Italian model.
  EE : East European model.
  EA : Saudi Arabia model.

5-3. PRINTED WIRING BOARD — MAIN SECTION —

SEE ADDITIONAL INFORMATION

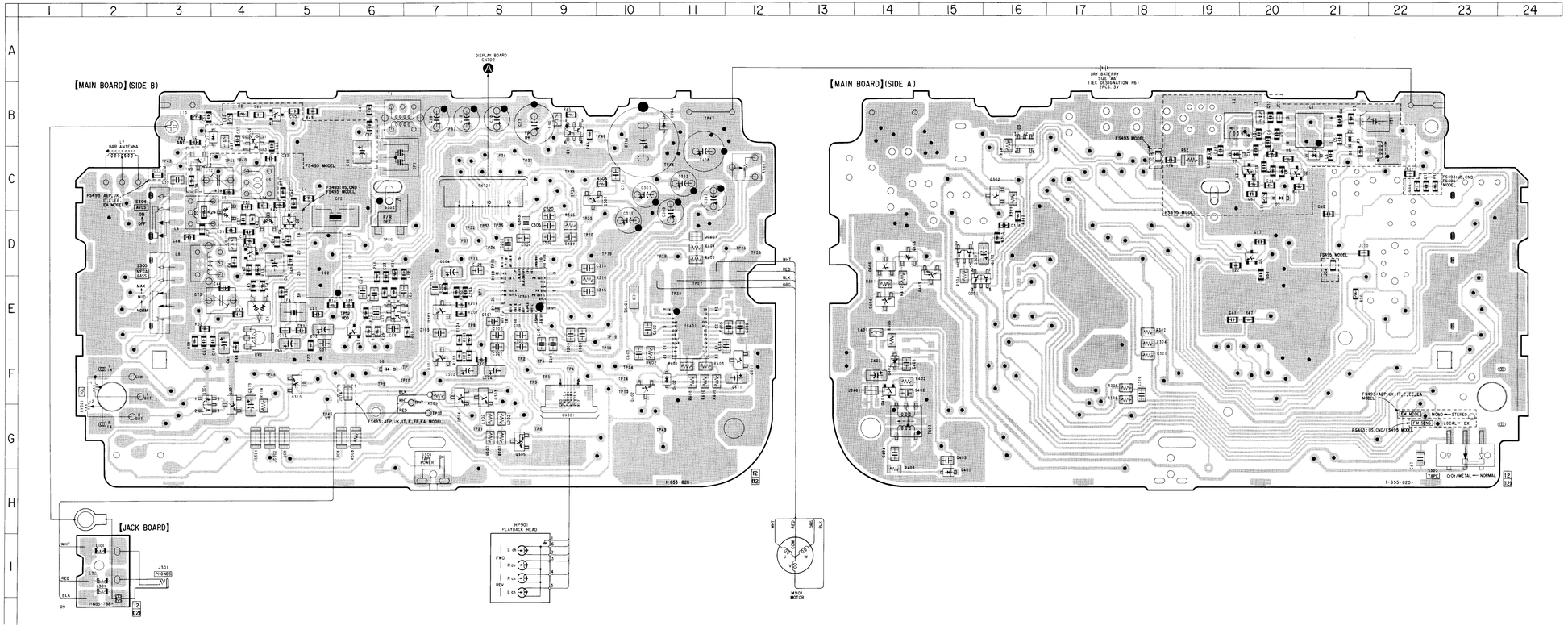

• **Semiconductor Location**

Ref. No.	Location
D1	C-21
D2	C-19
D3	C-20
D4	D-5
D5	C-4
D6	E-4
D7	B-3
D8	F-6
D9	C-21
D401	H-15
D402	F-14
D602	F-11
D704	B-11
IC1	B-21
IC2	E-5
IC3	B-16
IC301	E-8
IC601	E-11
Q1	B-4
Q2	C-21
Q3	C-20
Q4	B-4
Q5	D-20
Q6	E-7
Q7	F-6
Q8	D-5
Q9	C-3
Q10	D-4
Q11	C-9
Q101	F-7
Q201	E-7
Q301	E-15
Q302	C-16
Q303	F-8
Q304	G-7
Q305	G-8
Q306	F-3
Q307	F-4
Q308	C-10
Q309	D-15
Q310	F-5
Q401	F-14
Q601	F-12
Q602	F-10
Q603	E-15
Q604	E-14
Q605	D-14
Q606	D-14

Note:

- ——— : parts extracted from the component side.
- ● : Through hole.
- ▒▒▒ : Pattern from the side which enable seeing. (The other layer's patterns are not indicated.)
- Abbreviation
  - CND : Canadian model.
  - IT : Italian model.
  - EE : East European model.
  - EA : Saudi Arabia model.

5-4. PRINTED WIRING BOARD — DISPLAY SECTION —

- **Semiconductor Location**

Ref. No.	Location
D701	E-7
D702	E-7
D703	E-7
IC701	E-9
Q701	E-10
Q702	E-10
Q703	C-10
Q704	C-9

Note:
- ● : Through hole.
- ▒ : Pattern from the side which enable seeing. (The other layer's patterns are not indicated.)
- Abbreviation
  CND : Canadian model.
  IT : Italian model.
  EE : East European model.
  EA : Saudi Arabia model.

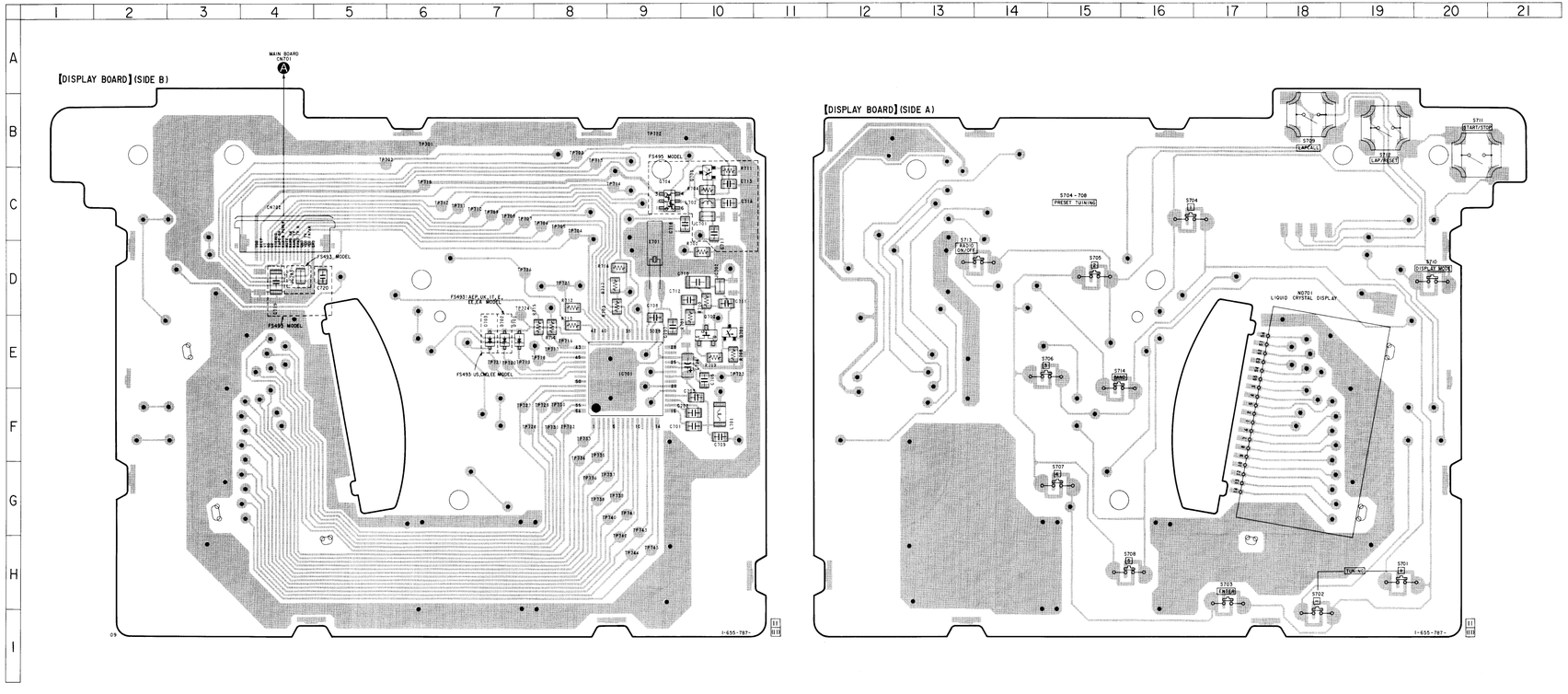

5-5. SCHEMATIC DIAGRAM — DISPLAY SECTION —

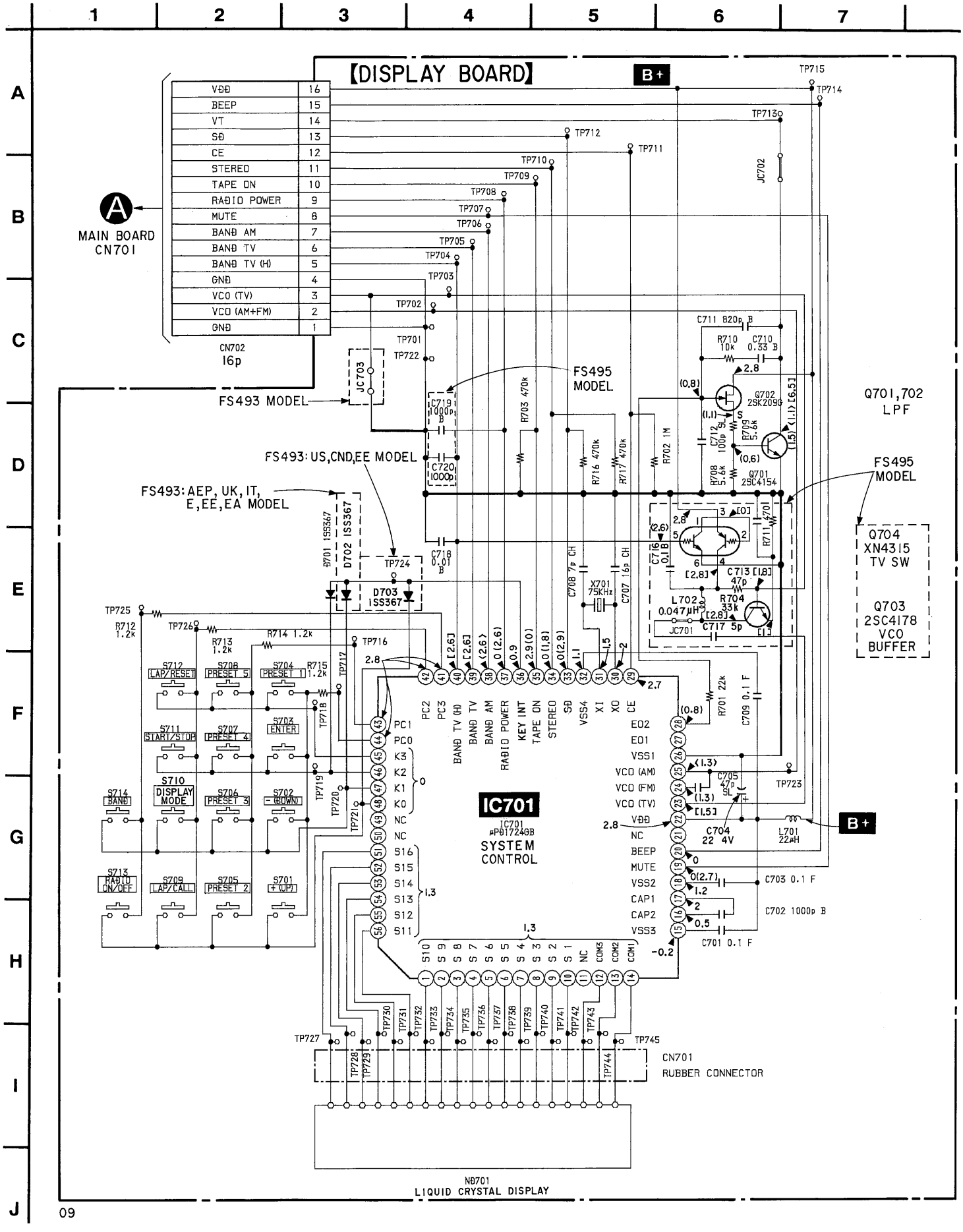

Note:

- All capacitors are in μF unless otherwise noted. pF:μμF 50WV or less are not indicated except for electrolytics and tantalums.
- All resistors are in Ω and 1/4W or less unless otherwise specified.
- [ ] : panel designation.
- B+ : B+ Line
- Voltage and waveforms are dc with respect to ground under no-signal conditions.
  no mark : TAPE PLAY
  ( ) : FM
  < > : AM
  [ ] : TV (13ch)
- Voltages are taken with a VOM (Input impedance 10MΩ). Voltage variations may be noted due to normal production tolerances.
- Power voltage is dc 3.0V and fed with regulated dc power supply from BATTERY TERMINAL.
- Abbreviation
  CND : Canadian model.
  IT : Italian model.
  EE : East European model.
  EA : Saudi Arabia model.

• IC PIN FUNCTION

• IC701 TUNER CONTROLLER/LCD DRIVE (μPD1724GB)

Pin No.	Pin Name	I/O	Function
1 to 10	S10 to S1	O	LCD segment signal output pin
11	NC	–	Not used
12 to 14	COM3 to COM1	O	LCD common signal output pin
15	VSS3	–	Pins connecting capacitors for doubler circuits generating the LCD drive voltage
16	CAP2	–	
17	CAP1	–	
18	VSS2	–	
19	MUTE	O	Generates 1.12 kHz pulses when using as a VDP
20	BEEP	O	BEEP signal output terminal
21	NC	–	Not used
22	VDD	–	The internal reset circuit functions when supplied with 0V to 1.5V
23	VCO (TV)	I	Partial oscillation frequency input pin (direct dividing method) (HIGH IMP when CE is low)
24	VCO (FM)	I	Partial oscillation frequency input pin (pulse swallow method) (PULL DOWN when CE is low)
25	VCO (AM)	I	
26	VSS1	–	GND
27	E01	O	Not used
28	E02	O	When the frequency obtained by frequency dividing the partial oscillation frequency is higher than the reference frequency: HIGH output. When Lower: LOW output. When the same: HIGH-IMP.
29	CE	I	The internal reset circuit functions when LOW becomes HIGH
30	XO	O	Connected to the liquid crystal oscillator Oscillates 75 kHz liquid crystals
31	XI	I	
32	VSS4	–	Connected to the regulator circuit capacitor
33	SD	I	No broadcasting station: HIGH output. With: LOW output
34	STEREO	I	Stereo level input ("L": Light on)
35	TAPE ON	I	Tape signal input ("H": TAPE)
36	KEY INIT	O	Initialize
37	RADIO POWER	O	Radio power on
38	BAND AM	O	Outputs HIGH potential only during AM reception
39	BAND TV	O	Become LOW potential when TV channels 1 to 3 are received
40	BAND TV (H)	O	Become HIGH potential when TV channels 4 to 12 are received
41 to 44	PC3 to PC0	O	Timing signal output for key matrix
45 to 48	K0 to K3	I	Key input
49, 50	NC	–	Not used
51 to 56	S16 to S11	O	LCD segment signal output pin

SECTION 6
EXPLODED VIEWS

NOTE:
- Items marked " * " are not stocked since they are seldom required for routine service. Some delay should be anticipated when ordering these items.
- The mechanical parts with no reference number in the exploded views are not supplied.
- Abbreviation
  CND : Canadian model
  IT : Italian model
  EE : East European model
  EA : Saudi Arabia model

6-1. CASSETTE LID AND DISPLAY BOARD SECTION

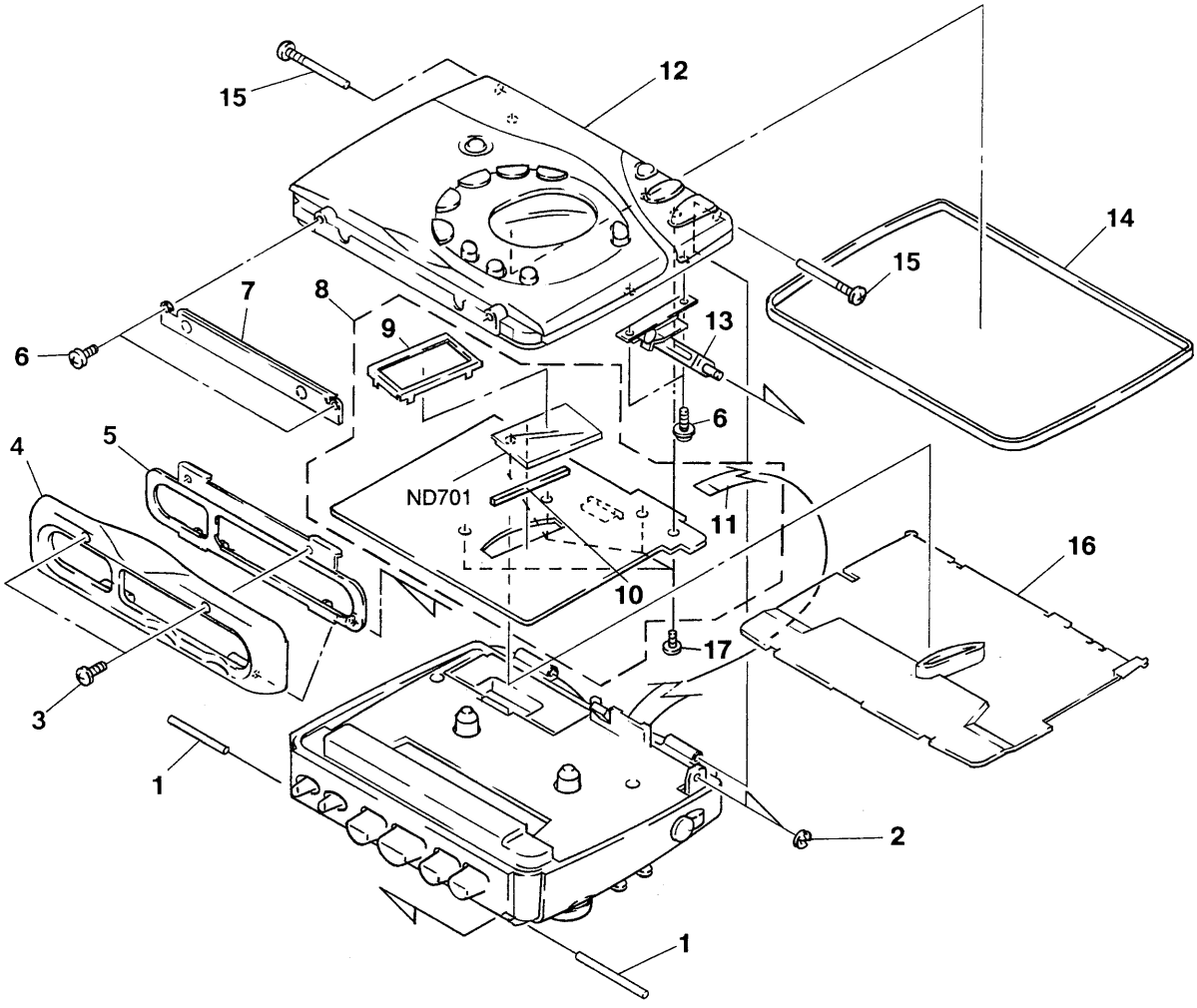

Ref. No.	Part No.	Description	Remark
1	3-383-668-01	SHAFT	
2	7-624-101-04	STOP RING 1.2 (E TYPE)	
3	3-704-243-51	SCREW (P1.7X3.5)	
4	3-921-872-01	BUCKLE	
5	3-921-873-01	BRACKET (BUCKLE)	
6	3-318-201-01	SCREW (B) (1.4X3), TAPPING	
7	3-921-857-01	REINFORCEMENT	
8	A-3016-692-A	DISPLAY BOARD, COMPLETE (FS493:US, CND)	
8	A-3016-696-A	DISPLAY BOARD, COMPLETE (AEP, UK, E, IT, EA)	
8	A-3016-699-A	DISPLAY BOARD, COMPLETE (EE)	
8	A-3016-701-A	DISPLAY BOARD, COMPLETE (FS495)	

Ref. No.	Part No.	Description	Remark
* 9	3-921-964-01	CASE (LCD)	
10	1-537-863-11	CONDUCTIVE BOARD, CONNECTION	
11	1-655-819-11	TUNER FLEXIBLE BOARD	
12	X-3369-997-1	LID ASSY, CASSETTE (FS493)	
12	X-3369-998-1	LID ASSY, CASSETTE (FS495)	
13	X-3369-989-1	ARM ASSY	
14	3-922-849-01	PACKING, CABINET	
15	3-386-373-01	SCREW, TAPPING	
16	3-921-858-01	COVER	
17	3-925-165-01	SCREW (1.4X2.5)	
ND701	1-810-797-11	DISPLAY BOARD, LIQUID CRYSTAL	

SEE ADDITIONAL INFORMATION

6-2. REAR CABINET AND MAIN BOARD SECTION

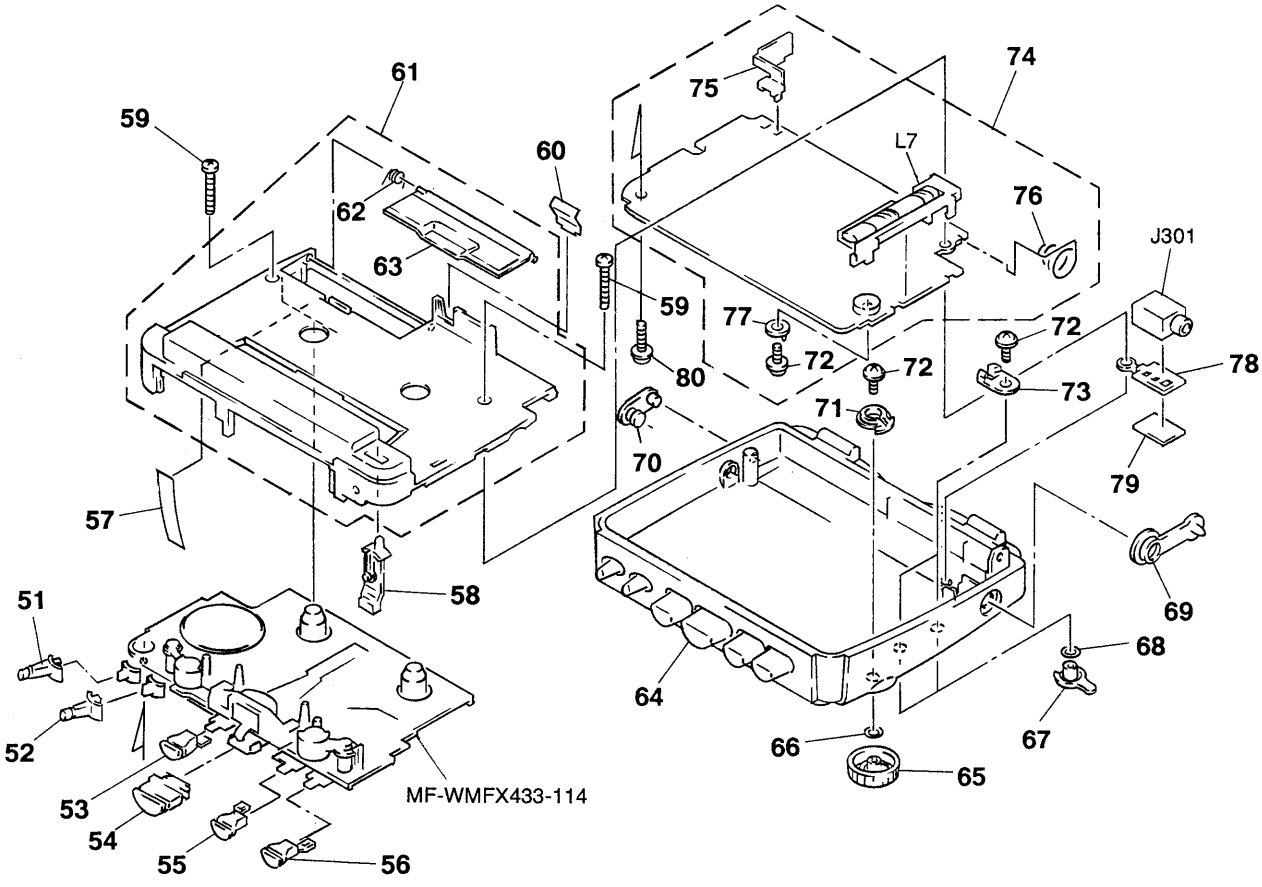

Ref. No.	Part No.	Description	Remark
51	3-921-863-01	KNOB (DIR)	
52	3-921-864-01	KNOB (MODE)	
53	3-921-862-01	BUTTON (REW)	
54	3-921-859-01	BUTTON (PLAY)	
55	3-921-861-01	BUTTON (FF)	
56	3-921-860-01	BUTTON (STOP)	
57	3-922-445-01	SHEET, BATTERY	
58	3-921-879-01	KNOB (T)	
59	4-958-597-01	SCREW	
60	3-904-803-01	DETENT, CASSETTE	
61	X-3369-990-1	CHASSIS SUB ASSY (US, CND)	
61	X-3369-991-1	CHASSIS SUB ASSY (AEP, UK, E, IT, EA, EE)	
62	3-926-267-01	SPRING, TORSION	
63	3-921-875-01	LID, BATTERY CASE	
64	X-3369-993-1	CABINET (REAR) ASSY (E, EA)	
64	X-3369-994-1	CABINET (REAR) ASSY (AEP, UK, IT, EE)	
64	X-3369-995-1	CABINET (REAR) ASSY (FS495)	
64	X-3369-996-1	CABINET (REAR) ASSY (FS493:US, CND)	
65	3-921-866-01	KNOB (VOL)	
66	3-913-607-01	RING (WATERPROOF SCREW), O	
67	3-921-867-01	KNOB (AVLS)	
68	3-326-560-02	RING (DIA. 2.5XDIA. 4.5), O	
69	3-386-371-01	PACKING, HP JACK	
70	3-922-447-01	PACKING, DC JACK	
71	3-921-868-01	JOINT (VOL)	
72	3-318-201-01	SCREW (B) (1.4X3), TAPPING	
73	3-921-869-01	JOINT (AVLS)	
74	A-3016-691-A	MAIN BOARD, COMPLETE (FS493:US, CND)	
74	A-3016-695-A	MAIN BOARD, COMPLETE (AEP, UK, E, IT, EA, EE)	
74	A-3016-700-A	MAIN BOARD, COMPLETE (FS495)	
75	3-921-878-01	TERMINAL BOARD, BATTERY	
76	3-921-877-01	SPRING, BATTERY COIL	
77	3-921-876-01	JOINT (B)	
* 78	3-922-444-01	TERMINAL BOARD, ANTENNA	
* 79	1-655-788-11	JACK BOARD	
80	3-921-955-01	SCREW (M1.4), TOOTH (WH)	
J301	1-563-298-21	JACK (SMALL TYPE) (DIA. 3.5) (PHONES)	
L7	1-501-760-11	ANTENNA, FERRITE-ROD	

REVISED

6-3. MECHANISM SECTION (MF-WMFX433-114)

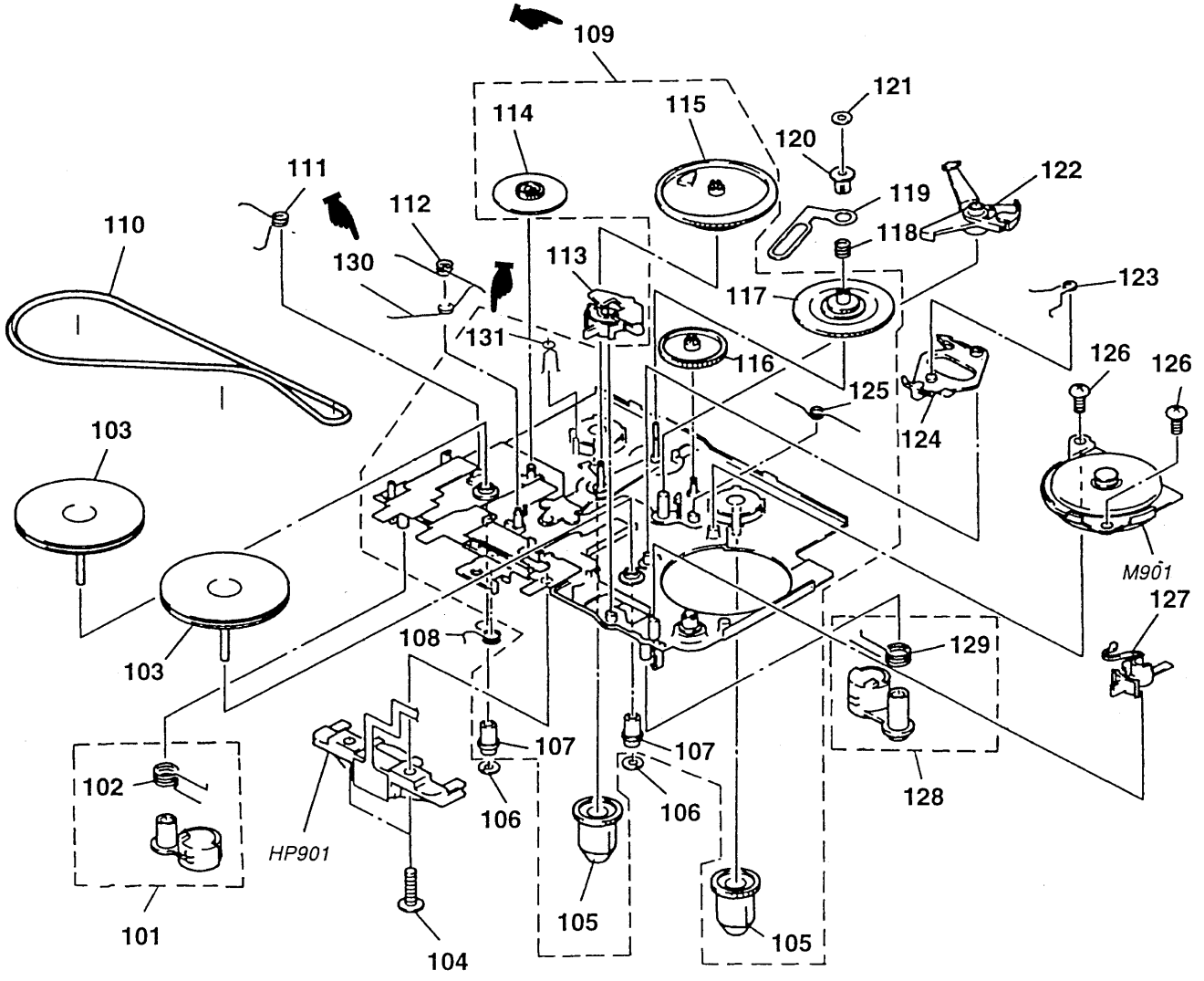

REF. No.	Part No.	Description	Remark
101	X-3369-749-1	PINCH LEVER (N) ASSY	
102	3-920-996-01	SPRING (PINCH N)	
103	X-3369-747-1	WHEEL ASSY, CAPSTAN	
104	3-704-197-71	SCREW (M1.4X4.5), LOCKING	
105	3-921-042-01	GEAR (REEL)	
106	3-921-797-01	WASHER	
107	3-921-003-01	BEARING	
108	3-920-993-01	SPRING (NR)	
109	X-3371-589-1	CHASSIS (COPM) ASSY	
110	3-354-868-11	BELT	
111	3-920-992-01	SPRING (STOP)	
112	3-920-991-01	SPRING (FR)	
113	3-921-053-01	LEVER, D SELECTION	
114	3-921-043-01	GEAR (D)	
115	X-3369-752-1	CLUTCH ASSY	

REF. No.	Part No.	Description	Remark
116	3-920-999-01	GEAR (A)	
117	3-921-050-01	GEAR (B)	
118	3-920-990-01	SPRING (UD), COMPRESSION	
119	3-921-335-01	WASHER, LEVER	
120	3-923-530-01	SLEEVE (M)	
121	3-728-091-01	WASHER, STOPPER	
122	3-921-052-01	LEVER (A), DETECTION	
123	3-920-994-11	SPRING (D SELECTION)	
124	3-921-022-01	LEVER (B), DETECTION	
125	3-920-995-11	SPRING (PLAY)	
126	3-703-816-31	SCREW (M1.4X1.6), SPECIAL HEAD	
127	3-921-023-01	LEVER, M SELECTION	
128	X-3369-748-1	PINCH LEVER (R) ASSY	
129	3-920-997-01	SPRING (PINCH R)	
130	3-931-387-01	SPRING (SW)	
131	3-933-324-01	SPRING (FR LEVER)	
HP901	1-500-205-11	PLAYBACK HEAD	
M901	1-698-457-11	MOTOR	

SEE ADDITIONAL INFORMATION

SECTION 7
ELECTRICAL PARTS LIST

DISPLAY

NOTE:

When indicating parts by reference number, please include the board name.

- Due to standardization, replacements in the parts list may be different from the parts specified in the diagrams or the components used on the set.
- -XX, -X mean standardized parts, so they may have some difference from the original one.
- Items marked "*" are not stocked since they are seldom required for routine service. Some delay should be anticipated when ordering these items.
- RESISTORS
  All resistors are in ohms
  METAL: Metal-film resistor
  METAL OXIDE: Metal Oxide-film resistor
  F : nonflammable
- SEMICONDUCTORS
  In each case, u: μ , for example:
  uA...: μA..., uPA...: μPA..., uPB...: μPB..., uPC...: μPC..., uPD...: μPD...
- CAPACITORS
  uF : μF
- COILS
  uH : μH
- Abbreviation
  CND : Canadian model
  IT : Italian model
  EE : East European model
  EA : Saudi Arabia model

Ref. No.	Part No.	Description	Remark
	A-3016-692-A	DISPLAY BOARD, COMPLETE (FS493:US, CND) **********	
	A-3016-696-A	DISPLAY BOARD, COMPLETE (FS493:AEP, UK, E, IT, EA) **********	
	A-3016-699-A	DISPLAY BOARD, COMPLETE (FS493:EE) **********	
	A-3016-701-A	DISPLAY BOARD, COMPLETE (FS495) **********	
	1-537-863-11	CONDUCTIVE BOARD, CONNECTION	
	1-655-819-11	TUNER FLEXIBLE BOARD	
*	3-921-964-01	CASE (LCD)	
		< CAPACITOR >	
C701	1-165-319-11	CERAMIC CHIP 0.1uF 50V	
C702	1-163-009-11	CERAMIC CHIP 0.001uF 10% 50V	
C703	1-165-319-11	CERAMIC CHIP 0.1uF 50V	
C704	1-104-847-11	TANTAL. CHIP 22uF 20% 4V	
C705	1-163-109-00	CERAMIC CHIP 47PF 5% 50V	
C707	1-163-098-00	CERAMIC CHIP 16PF 5% 50V	
C708	1-163-224-11	CERAMIC CHIP 7PF 0.25PF 50V	
C709	1-165-319-11	CERAMIC CHIP 0.1uF 50V	
C710	1-162-568-11	CERAMIC CHIP 0.33uF 10% 16V	
C711	1-163-139-00	CERAMIC CHIP 820PF 5% 50V	
C712	1-163-117-00	CERAMIC CHIP 100PF 5% 50V	
C713	1-163-109-00	CERAMIC CHIP 47PF 5% 50V	(FS495)
C716	1-164-004-11	CERAMIC CHIP 0.1uF 10% 50V	(FS495)
C717	1-163-088-00	CERAMIC CHIP 5PF 5% 50V	(FS495)
C718	1-164-232-11	CERAMIC CHIP 0.01uF 10% 50V	
C719	1-163-205-00	CERAMIC CHIP 0.001uF 5% 50V	(FS495)
C720	1-163-009-11	CERAMIC CHIP 0.001uF 10% 50V	(FS495)
		< CONNECTOR >	
CN702	1-766-584-11	CONNECTOR, FPC (ZIF) 16P	
		< DIODE >	
D701	8-719-049-09	DIODE 1SS367	
D702	8-719-049-09	DIODE 1SS367	(FS493:AEP, UK, IT, E, EE, EA)
D703	8-719-049-09	DIODE 1SS367	(FS493:US, CND, EE)
		< IC >	
IC701	8-759-329-93	IC uPD1724GB-688-1A7	
		< JUMPER RESISTOR >	
JC701	1-216-295-11	CONDUCTOR, CHIP (2012)	(FS495)
JC702	1-216-295-11	CONDUCTOR, CHIP (2012)	
JC703	1-216-295-11	CONDUCTOR, CHIP (2012)	(FS493)
		< COIL >	
L701	1-410-946-31	INDUCTOR CHIP 22uH	
L702	1-412-999-11	INDUCTOR CHIP 0.047uH	(FS495)
		< LIQUID CRYSTAL DISPLAY >	
ND701	1-810-797-11	DISPLAY PANEL, LIQUID CRYSTAL	
		< TRANSISTOR >	
Q701	8-729-602-21	TRANSISTOR 2SC4154-F	
Q702	8-729-220-93	TRANSISTOR 2SK209-G	
Q703	8-729-117-73	TRANSISTOR 2SC4178-F14	(FS495)
Q704	8-729-422-18	TRANSISTOR XN4315	(FS495)
		< RESISTOR >	
R701	1-216-081-00	METAL CHIP 22K 5% 1/10W	
R702	1-216-121-00	METAL CHIP 1M 5% 1/10W	
R703	1-216-113-00	METAL CHIP 470K 5% 1/10W	
R704	1-216-085-00	METAL CHIP 33K 5% 1/10W	(FS495)
R708	1-216-067-00	METAL CHIP 5.6K 5% 1/10W	
R709	1-216-067-00	METAL CHIP 5.6K 5% 1/10W	
R710	1-216-073-00	METAL CHIP 10K 5% 1/10W	
R711	1-216-041-00	METAL CHIP 470 5% 1/10W	(FS495)
R712	1-216-051-00	METAL CHIP 1.2K 5% 1/10W	
R713	1-216-051-00	METAL CHIP 1.2K 5% 1/10W	
R714	1-216-051-00	METAL CHIP 1.2K 5% 1/10W	
R715	1-216-051-00	METAL CHIP 1.2K 5% 1/10W	
R716	1-216-113-00	METAL CHIP 470K 5% 1/10W	
R717	1-216-113-00	METAL CHIP 470K 5% 1/10W	
		< SWITCH >	
S709	1-692-453-11	SWITCH, KEY BOARD (LAP/CALL)	
S711	1-692-453-11	SWITCH, KEY BOARD (START/STOP)	
S712	1-692-453-11	SWITCH, KEY BOARD (LAP/RESET)	

DISPLAY **JACK** **MAIN**

SEE ADDITIONAL INFORMATION

Ref. No.	Part No.	Description				Remark
		< VIBRATOR >				
X701	1-760-666-11	VIBRATOR, CRYSTAL (75kHz)				
**********						
*	1-655-788-11	JACK BOARD				
		**********				
*	3-922-444-01	TERMINAL BOARD, ANTENNA				
		< JACK >				
J301	1-563-298-11	JACK (SMALL TYPE) (DIA. 3.5) (PHONES)				
		< COIL >				
L101	1-412-983-11	INDUCTOR	2.2uH			
L201	1-412-983-11	INDUCTOR	2.2uH			
L301	1-412-983-11	INDUCTOR	2.2uH			
**********						
	A-3016-691-A	MAIN BOARD, COMPLETE (FS493:US, CND)				
		**********				
	A-3016-695-A	MAIN BOARD, COMPLETE (FS493:AEP, UK, E, IT, EA, EE)				
		**********				
	A-3016-700-A	MAIN BOARD, COMPLETE (FS495)				
		**********				
	3-318-201-01	SCREW (B) (1.4X3), TAPPING				
*	3-921-876-01	JOINT (B)				
	3-921-877-01	SPRING, BATTERY COIL				
	3-921-878-01	TERMINAL BOARD, BATTERY				
		< CAPACITOR >				
C1	1-162-966-11	CERAMIC CHIP	0.0022uF	10%	50V (FS493:US, CND/FS495)	
C2	1-162-953-11	CERAMIC CHIP	100PF	5%	50V	
C4	1-162-934-11	CERAMIC CHIP	3PF	0.25PF	50V	(FS495)
C5	1-164-357-11	CERAMIC CHIP	1000PF	5%	50V	(FS495)
C6	1-164-357-11	CERAMIC CHIP	1000PF	5%	50V	(FS495)
C7	1-164-357-11	CERAMIC CHIP	1000PF	5%	50V	(FS495)
C8	1-164-357-11	CERAMIC CHIP	1000PF	5%	50V	(FS495)
C9	1-162-943-11	CERAMIC CHIP	15PF	5%	50V	(FS495)
C10	1-164-357-11	CERAMIC CHIP	1000PF	5%	50V	(FS495)
C11	1-104-908-11	TANTAL. CHIP	47uF	20%	4V	(FS495)
C12	1-162-920-11	CERAMIC CHIP	27PF	5%	50V	(FS495)
C13	1-162-970-11	CERAMIC CHIP	0.01uF	10%	25V	(FS495)
C14	1-162-970-11	CERAMIC CHIP	0.01uF	10%	25V	(FS495)
C15	1-164-357-11	CERAMIC CHIP	1000PF	5%	50V	(FS495)
C16	1-162-949-11	CERAMIC CHIP	47PF	5%	50V	(FS495)
C17	1-162-995-11	CERAMIC CHIP	0.022uF	10%	50V	
C18	1-126-163-11	ELECT	4.7uF	20%	50V	
C19	1-126-163-11	ELECT	4.7uF	20%	50V	
C20	1-126-157-11	ELECT	10uF	20%	16V	
C21	1-164-227-11	CERAMIC CHIP	0.022uF	10%	25V	
C22	1-164-227-11	CERAMIC CHIP	0.022uF	10%	25V	
C23	1-164-227-11	CERAMIC CHIP	0.022uF	10%	25V	
C24	1-164-005-11	CERAMIC CHIP	0.47uF		16V	
C25	1-164-005-11	CERAMIC CHIP	0.47uF		16V	
C26	1-164-346-11	CERAMIC CHIP	1uF		16V	
C27	1-126-246-11	ELECT CHIP	220uF	20%	4V	
C28	1-164-346-11	CERAMIC CHIP	1uF		16V	
C29	1-164-346-11	CERAMIC CHIP	1uF		16V	
C30	1-162-930-11	CERAMIC CHIP	1PF	0.25PF	50V	(FS495)
C31	1-107-823-11	CERAMIC CHIP	0.47uF	10%	16V	
C32	1-135-151-21	TANTALUM CHIP	4.7uF	20%	4V	
C33	1-164-357-11	CERAMIC CHIP	1000PF	5%	50V	
C34	1-164-357-11	CERAMIC CHIP	1000PF	5%	50V	
C35	1-164-357-11	CERAMIC CHIP	1000PF	5%	50V	
C36	1-162-959-11	CERAMIC CHIP	330PF	5%	50V	
C37	1-162-936-11	CERAMIC CHIP	5PF	0.25PF	50V	
C38	1-164-346-11	CERAMIC CHIP	1uF		16V	
C39	1-162-932-11	CERAMIC CHIP	2PF	0.25PF	50V	
C40	1-162-970-11	CERAMIC CHIP	0.01uF	10%	25V	
C41	1-104-908-11	TANTAL. CHIP	47uF	20%	4V	
C42	1-164-362-11	CERAMIC CHIP	470PF	5%	50V	
C43	1-164-227-11	CERAMIC CHIP	0.022uF	10%	25V	
C44	1-164-315-11	CERAMIC CHIP	470PF	5%	50V	
C45	1-162-946-11	CERAMIC CHIP	27PF	5%	50V	
C46	1-164-227-11	CERAMIC CHIP	0.022uF	10%	25V	
C47	1-162-941-11	CERAMIC CHIP	10PF	0.5PF	50V	
C48	1-162-970-11	CERAMIC CHIP	0.01uF	10%	25V	
C49	1-135-180-21	TANTALUM CHIP	3.3uF	20%	6.3V	
C50	1-135-201-11	TANTALUM CHIP	10uF	20%	4V	
C51	1-162-934-11	CERAMIC CHIP	3PF	0.25PF	50V	
C52	1-162-934-11	CERAMIC CHIP	3PF	0.25PF	50V	(FS495)
C53	1-162-945-11	CERAMIC CHIP	22PF	5%	50V	(FS495)
C54	1-162-970-11	CERAMIC CHIP	0.01uF	10%	50V	
C55	1-162-936-11	CERAMIC CHIP	5PF	0.25PF	50V	(FS495)
C56	1-162-936-11	CERAMIC CHIP	5PF	0.25PF	50V	
C57	1-164-227-11	CERAMIC CHIP	0.022uF	10%	25V	(FS495)
C59	1-162-908-11	CERAMIC CHIP	3PF	5%	50V	
C60	1-162-970-11	CERAMIC CHIP	0.01uF	10%	50V	
C61	1-162-970-11	CERAMIC CHIP	0.01uF	10%	50V	
C62	1-162-953-11	CERAMIC CHIP	100PF	5%	50V	
C63	1-162-953-11	CERAMIC CHIP	100PF	5%	50V	
C64	1-162-953-11	CERAMIC CHIP	100PF	5%	50V	(FS495)
C66	1-164-357-11	CERAMIC CHIP	1000PF	5%	50V	(FS495)
C68	1-107-826-11	CERAMIC CHIP	0.1uF	10%	16V	
C101	1-163-005-11	CERAMIC CHIP	470PF	10%	50V	
C102	1-163-005-11	CERAMIC CHIP	470PF	10%	50V	

SEE ADDITIONAL INFORMATION

MAIN

Ref. No.	Part No.	Description				Remark
C103	1-162-968-11	CERAMIC CHIP	0.0047uF	10%	50V	
C104	1-135-201-11	TANTALUM CHIP	10uF	20%	4V	
C105	1-164-346-11	CERAMIC CHIP	1uF		16V	
C106	1-163-011-11	CERAMIC CHIP	0.0015uF	10%	50V	
C107	1-164-346-11	CERAMIC CHIP	1uF		16V	
C108	1-163-001-11	CERAMIC CHIP	220PF	10%	50V	
C201	1-163-005-11	CERAMIC CHIP	470PF	10%	50V	
C202	1-163-005-11	CERAMIC CHIP	470PF	10%	50V	
C203	1-162-968-11	CERAMIC CHIP	0.0047uF	10%	50V	
C204	1-135-201-11	TANTALUM CHIP	10uF	20%	4V	
C205	1-164-346-11	CERAMIC CHIP	1uF		16V	
C206	1-163-011-11	CERAMIC CHIP	0.0015uF	10%	50V	
C207	1-164-346-11	CERAMIC CHIP	1uF		16V	
C208	1-163-001-11	CERAMIC CHIP	220PF	10%	50V	
C301	1-164-346-11	CERAMIC CHIP	1uF		16V	
C302	1-135-151-21	TANTALUM CHIP	4.7uF	20%	4V	
C303	1-164-004-11	CERAMIC CHIP	0.1uF	10%	16V	
C304	1-164-346-11	CERAMIC CHIP	1uF		16V	
C305	1-164-505-11	CERAMIC CHIP	2.2uF		16V	
C306	1-164-004-11	CERAMIC CHIP	0.1uF	10%	16V	
C307	1-126-162-11	ELECT	3.3uF	20%	50V	
C308	1-163-038-91	CERAMIC CHIP	0.1uF		25V	
C309	1-126-153-11	ELECT	22uF	20%	6.3V	
C310	1-164-222-11	CERAMIC CHIP	0.22uF		25V	
C311	1-126-160-11	ELECT	1uF	20%	50V	
C312	1-126-153-11	ELECT	22uF	20%	6.3V	
C313	1-126-153-11	ELECT	22uF	20%	6.3V	
C314	1-164-346-11	CERAMIC CHIP	1uF		16V	
C315	1-164-005-11	CERAMIC CHIP	0.47uF		16V	
C316	1-164-232-11	CERAMIC CHIP	0.01uF		50V	
C317	1-104-847-11	TANTAL. CHIP	22uF	20%	4V	
C318	1-162-964-11	CERAMIC CHIP	0.001uF	10%	50V	
C319	1-135-201-11	TANTAL. CHIP	10uF	20%	4V	
C320	1-162-953-11	CERAMIC CHIP	100PF	5%	50V	
C402	1-163-093-00	CERAMIC CHIP	10PF	5%	50V	
C403	1-104-847-11	TANTAL. CHIP	22uF	20%	4V	
C404	1-163-093-00	CERAMIC CHIP	10PF	5%	50V	
C405	1-163-009-11	CERAMIC CHIP	0.001uF	10%	50V	
C406	1-164-346-11	CERAMIC CHIP	1uF		16V	
C602	1-164-489-11	CERAMIC CHIP	0.22uF	10%	16V	
C603	1-163-809-11	CERAMIC CHIP	0.047uF	10%	25V	
C604	1-107-823-11	CERAMIC CHIP	0.47uF	10%	16V	
C605	1-164-005-11	CERAMIC CHIP	0.47uF		25V	
C608	1-124-434-11	ELECT CHIP	220uF	20%	4V	
C609	1-164-346-11	CERAMIC CHIP	1uF		16V	
C611	1-135-151-21	TANTALUM CHIP	4.7uF	20%	4V	
C714	1-125-639-11	DOUBLE LAYERS	56000uF		3.5V	

Ref. No.	Part No.	Description	Remark
		< FILTER >	
CF1	1-579-823-21	FILTER, CERAMIC (450kHz)	
CF2	1-760-648-11	FILTER, CERAMIC (10.7MHz)	
CF4	1-577-065-21	FILTER, CERAMIC (10.7MHz)	
		< CONNECTOR >	
CN301	1-766-819-11	CONNECTOR, FPC (ZIF) 6P	
CN701	1-766-584-11	CONNECTOR, FPC (ZIF) 16P	
		< TRIMMER >	
CT1	1-141-327-11	CAP, VAR, TRIMMER (CHIP TYPE)	(FS495)
CT2	1-141-463-11	CAP, ADJ	
CT3	1-141-463-11	CAP, ADJ	
		< DIODE >	
D1	8-713-100-11	DIODE 1T362	(FS495)
D2	8-713-100-11	DIODE 1T362	(FS495)
D3	8-719-404-46	DIODE MA110	(FS495)
D4	8-719-032-80	DIODE KV1430	
D5	8-719-032-80	DIODE KV1430	
D6	8-719-951-05	DIODE KV1560	
D7	8-719-049-09	DIODE 1SS367	(FS495)
D8	8-719-404-46	DIODE MA110	(FS495)
D9	8-719-049-09	DIODE 1SS367	(FS495)
D401	8-719-404-46	DIODE MA110	
D402	8-719-977-52	DIODE DTZ16A	
D602	8-719-049-09	DIODE 1SS367	
D704	8-719-049-09	DIODE 1SS367	
		< IC >	
IC1	8-759-339-49	IC TA7358F-N	(FS495)
IC2	8-752-072-12	IC CXA1538N	
IC3	8-759-339-16	IC PST9119NL	
IC301	8-759-332-69	IC LA4585M	
IC601	8-759-275-47	IC LB1674V	
		< JUMPER RESISTOR >	
JC3	1-216-864-11	METAL CHIP 0 5% 1/16W	(FS495)
JC4	1-216-864-11	METAL CHIP 0 5% 1/16W	(FS495)
JC6	1-216-864-11	METAL CHIP 0 5% 1/16W	
JC7	1-216-864-11	METAL CHIP 0 5% 1/16W	
JC8	1-216-296-00	METAL CHIP 0 5% 1/8W	
JC9	1-216-296-00	METAL CHIP 0 5% 1/8W	
JC10	1-216-864-11	METAL CHIP 0 5% 1/16W	
JC11	1-216-864-11	METAL CHIP 0 5% 1/16W	
JC12	1-216-864-11	METAL CHIP 0 5% 1/16W	
JC13	1-216-864-11	METAL CHIP 0 5% 1/16W	(FS493:AEP, UK, IT, E, EE, EA)
JC14	1-216-295-00	METAL CHIP 0 5% 1/10W	(FS493:AEP, UK, IT, E, EE, EA)

MAIN

SEE ADDITIONAL INFORMATION

Ref. No.	Part No.	Description	Remark
JC15	1-216-864-11	METAL CHIP 0 5% 1/16W	(FS493)
JC301	1-216-296-00	METAL CHIP 0 5% 1/8W	
JC302	1-216-296-00	METAL CHIP 0 5% 1/8W	
JC401	1-216-295-00	METAL CHIP 0 5% 1/10W	
JC601	1-216-864-11	METAL CHIP 0 5% 1/16W	
		< COIL >	
L1	1-411-305-11	COIL, TV RF	(FS495)
L2	1-411-306-21	COIL, TV OSC	(FS495)
L3	1-410-997-31	INDUCTOR CHIP 2.2uH	(FS495)
L4	1-412-975-31	INDUCTOR CHIP 0.47uH	
L5	1-411-289-11	COIL (WITH CORE) (RF)	
L6	1-411-288-11	COIL (WITH CORE) (OSC)	
L7	1-501-760-11	ANTENNA, FERRITE-ROD	
L8	1-411-205-11	COIL, AM OSC	
L9	1-410-006-31	INDUCTOR CHIP 10uH	
L10	1-410-006-31	INDUCTOR CHIP 10uH	
L11	1-410-204-31	INDUCTOR CHIP 10uH	(FS495)
L12	1-412-967-31	INDUCTOR 0.1uH	(FS495)
L13	1-412-967-31	INDUCTOR 0.1uH	
L14	1-412-983-31	INDUCTOR CHIP 2.2uH	(FS493:US, CND/FS495)
L15	1-412-975-31	INDUCTOR CHIP 0.47uH	(FS495)
L16	1-412-983-31	INDUCTOR CHIP 2.2uH	(FS495)
L103	1-414-170-11	INDUCTOR CHIP 100uH	
L202	1-414-170-11	INDUCTOR CHIP 100uH	
L401	1-412-006-31	INDUCTOR CHIP 10uH	
		< TRANSISTOR >	
Q1	8-729-117-73	TRANSISTOR 2SC4178-F14	(FS493:US, CND/FS495)
Q2	8-729-923-32	TRANSISTOR 2SC4083	(FS495)
Q3	8-729-117-73	TRANSISTOR 2SC4178-F14	(FS495)
Q4	8-729-925-52	TRANSISTOR IMD6	(FS495)
Q5	8-729-029-10	TRANSISTOR DTC143TUA	
Q6	8-729-402-81	TRANSISTOR XN4501	
Q7	8-729-029-10	TRANSISTOR DTC143TUA	
Q8	8-729-602-21	TRANSISTOR 2SC4154-F	(FS493:US, CND/FS495)
Q9	8-729-807-86	TRANSISTOR 2SB1295-UL5	(FS495)
Q10	8-729-117-73	TRANSISTOR 2SC4178-F14	
Q11	8-729-402-16	TRANSISTOR XN4608	
Q101	8-729-027-56	TRANSISTOR DTC143TKA	
Q201	8-729-027-56	TRANSISTOR DTC143TKA	
Q301	8-729-403-17	TRANSISTOR XN1215	
Q302	8-729-807-87	TRANSISTOR 2SB1295-UL6	
Q303	8-729-027-56	TRANSISTOR DTC143TKA	
Q304	8-729-027-44	TRANSISTOR DTC114TKA	
Q305	8-729-027-26	TRANSISTOR DTA114YKA	
Q306	8-729-421-23	TRANSISTOR XN1216	
Q307	8-729-027-24	TRANSISTOR DTA114TKA	
Q308	8-729-027-44	TRANSISTOR DTC114TKA	
Q309	8-729-402-13	TRANSISTOR XN1501	
Q310	8-729-027-24	TRANSISTOR DTA114TKA	
Q401	8-729-602-21	TRANSISTOR 2SC4154-F	
Q601	8-729-026-50	TRANSISTOR 2SA1037AK-QR	
Q602	8-729-027-56	TRANSISTOR DTC143TKA	
Q603	8-729-027-26	TRANSISTOR DTA114YKA	
Q604	8-729-027-56	TRANSISTOR DTC143TKA	
Q605	8-729-141-48	TRANSISTOR 2SB624-BV345	
Q606	8-729-141-48	TRANSISTOR 2SB624-BV345	
		< RESISTOR >	
R1	1-216-821-11	METAL CHIP 1K 5% 1/16W	(FS493:US, CND/FS495)
R2	1-216-821-11	METAL CHIP 1K 5% 1/16W	(FS493:US, CND/FS495)
R3	1-216-845-11	METAL CHIP 100K 5% 1/16W	(FS495)
R4	1-216-845-11	METAL CHIP 100K 5% 1/16W	(FS495)
R5	1-216-833-11	METAL CHIP 10K 5% 1/16W	(FS495)
R6	1-216-833-11	METAL CHIP 10K 5% 1/16W	(FS495)
R7	1-216-817-11	METAL CHIP 470 5% 1/16W	(FS495)
R8	1-216-829-11	METAL CHIP 4.7K 5% 1/16W	(FS495)
R14	1-216-839-11	METAL CHIP 33K 5% 1/16W	
R15	1-216-827-11	METAL CHIP 3.3K 5% 1/16W	
R16	1-216-827-11	METAL CHIP 3.3K 5% 1/16W	
R17	1-216-845-11	METAL CHIP 100K 5% 1/16W	
R18	1-216-845-11	METAL CHIP 100K 5% 1/16W	
R19	1-216-817-11	METAL CHIP 470 5% 1/16W	
R20	1-216-817-11	METAL CHIP 470 5% 1/16W	
R21	1-216-839-11	METAL CHIP 33K 5% 1/16W	
R22	1-216-833-11	METAL CHIP 10K 5% 1/16W	
R25	1-216-833-11	METAL CHIP 10K 5% 1/16W	
R26	1-216-833-11	METAL CHIP 10K 5% 1/16W	
R27	1-216-825-11	METAL CHIP 2.2K 5% 1/16W	
R28	1-216-853-11	METAL CHIP 470K 5% 1/16W	
R29	1-216-853-11	METAL CHIP 470K 5% 1/16W	
R31	1-216-817-11	METAL CHIP 470 5% 1/16W	
R32	1-216-833-11	METAL CHIP 10K 5% 1/16W	
R33	1-216-833-11	METAL CHIP 10K 5% 1/16W	
R34	1-216-853-11	METAL CHIP 470K 5% 1/16W	
R35	1-216-813-11	METAL CHIP 220 5% 1/16W	
R38	1-216-837-11	METAL CHIP 22K 5% 1/16W	(FS495)
R39	1-216-853-11	METAL CHIP 470K 5% 1/16W	
R41	1-216-817-11	METAL CHIP 470 5% 1/16W	(FS495)
R42	1-216-853-11	METAL CHIP 470K 5% 1/16W	
R43	1-216-853-11	METAL CHIP 470K 5% 1/16W	
R44	1-216-833-11	METAL CHIP 10K 5% 1/16W	
R45	1-216-829-11	METAL CHIP 4.7K 5% 1/16W	
R46	1-216-833-11	METAL CHIP 10K 5% 1/16W	
R47	1-216-845-11	METAL CHIP 100K 5% 1/16W	
R48	1-216-097-00	METAL CHIP 100K 5% 1/10W	

SEE ADDITIONAL INFORMATION

MAIN

Ref. No.	Part No.	Description				Remark
R49	1-216-825-11	METAL CHIP	2.2K	5%	1/16W	
R50	1-216-833-11	METAL CHIP	10K	5%	1/16W	
R51	1-216-821-11	METAL CHIP	1K	5%	1/16W	(FS493:US, CND/FS495)
R52	1-216-178-00	METAL CHIP	150	5%	1/8W	(FS495)
R101	1-216-855-11	METAL CHIP	680K	5%	1/16W	
R102	1-216-819-11	METAL CHIP	680	5%	1/16W	
R103	1-216-835-11	METAL CHIP	15K	5%	1/16W	
R104	1-216-834-11	METAL CHIP	12K	5%	1/16W	
R105	1-216-089-00	METAL CHIP	47K	5%	1/10W	
R107	1-216-045-00	METAL CHIP	680	5%	1/10W	
R201	1-216-855-11	METAL CHIP	680K	5%	1/16W	
R202	1-216-819-11	METAL CHIP	680	5%	1/16W	
R203	1-216-835-11	METAL CHIP	15K	5%	1/16W	
R204	1-216-834-11	METAL CHIP	12K	5%	1/16W	
R205	1-216-089-00	METAL CHIP	47K	5%	1/10W	
R207	1-216-045-00	METAL CHIP	680	5%	1/10W	
R301	1-216-073-00	METAL CHIP	10K	5%	1/10W	
R302	1-216-069-00	METAL CHIP	6.8K	5%	1/10W	
R303	1-216-841-11	METAL CHIP	47K	5%	1/16W	
R304	1-216-061-00	METAL CHIP	3.3K	5%	1/10W	
R305	1-216-109-00	METAL CHIP	330K	5%	1/10W	
R306	1-216-045-00	METAL CHIP	680	5%	1/10W	
R308	1-216-214-00	METAL GLAZE	4.7K	5%	1/8W	
R309	1-216-059-00	METAL CHIP	2.7K	5%	1/10W	
R310	1-216-298-00	METAL CHIP	2.2	5%	1/10W	
R311	1-216-065-00	METAL CHIP	4.7K	5%	1/10W	
R312	1-216-833-11	METAL CHIP	10K	5%	1/16W	
R313	1-216-847-11	METAL CHIP	150K	5%	1/10W	
R314	1-216-065-00	METAL CHIP	4.7K	5%	1/10W	
R402	1-216-097-00	METAL CHIP	100K	5%	1/10W	
R403	1-216-049-91	METAL GLAZE	1K	5%	1/10W	
R405	1-216-097-00	METAL CHIP	100K	5%	1/10W	
R601	1-216-049-91	METAL GLAZE	1K	5%	1/10W	
R602	1-216-089-00	METAL CHIP	47K	5%	1/10W	
R603	1-216-033-00	METAL CHIP	220	5%	1/10W	
R604	1-216-065-00	METAL CHIP	4.7K	5%	1/10W	
R605	1-216-067-00	METAL CHIP	5.6K	5%	1/10W	
R608	1-216-089-00	METAL CHIP	47K	5%	1/10W	
R609	1-216-097-00	METAL CHIP	100K	5%	1/10W	
R610	1-216-097-00	METAL CHIP	100K	5%	1/10W	
R611	1-216-025-91	METAL GLAZE	100	5%	1/10W	
R612	1-216-025-91	METAL GLAZE	100	5%	1/10W	

< VARIABLE RESISTOR >

RV1	1-223-873-11	RES, ADJ
RV301	1-230-593-11	RES, VAR, CARBON 10K/10K (VOL)
RV601	1-241-916-11	RES, ADJ, CARBON 4.7K

Ref. No.	Part No.	Description	Remark
		< SWITCH >	
S301	1-762-302-11	SWITCH, PUSH (1 KEY)(TAPE POWER)	
S302	1-572-288-11	SWITCH, PUSH (F/R DET)	
S303	1-572-272-11	SWITCH, SLIDE (TAPE, FM SENS, FM MODE)	
S304	1-570-397-11	SWITCH, SLIDE (AVLS)	
S305	1-570-113-11	SWITCH, SLIDE (MEGA BASS)	
		< TRANSFORMER >	
T1	1-411-210-11	TRANSFORMER, IF	
T401	1-450-306-11	TRANSFORMER, DC-DC CONVERTER	
		< THERMISTOR >	
TH601	1-810-794-11	THERMISTOR, POSITIVE	

****

MISCELLANEOUS
****

10	1-537-863-11	CONDUCTIVE BOARD, CONNECTION
11	1-655-819-11	TUNER FLEXIBLE BOARD
HP901	1-500-205-11	PLAYBACK HEAD
J301	1-563-298-11	JACK (SMALL TYPE)(DIA. 3.5)(PHONES)
L7	1-501-760-11	ANTENNA, FERRITE-ROD
M901	1-698-457-11	MOTOR
ND701	1-810-797-11	DISPLAY BOARD, LIQUID CRYSTAL

****

ACCESSORIES & PACKING MATERIALS
****

	3-798-437-11	MANUAL, INSTRUCTION (ENGLISH, FRENCH) (AEP, UK, IT, EA, EE)
	3-798-437-21	MANUAL, INSTRUCTION (ENGLISH)(US)
	3-798-437-31	MANUAL, INSTRUCTION (ENGLISH, FRENCH) (CND)
	3-798-437-41	MANUAL, INSTRUCTION (GERMAN, SPANISH) (AEP, UK, IT)
	3-798-437-51	MANUAL, INSTRUCTION (DUTCH, SWEDISH) (AEP, UK, IT)
	3-798-437-61	MANUAL, INSTRUCTION (ITALIAN, PORTUGUESE) (AEP, UK, IT)
	3-798-437-71	MANUAL, INSTRUCTION (ENGLISH, FRENCH)(E)
	3-798-437-81	MANUAL, INSTRUCTION (SPANISH, CHINESE)(E)
	3-798-437-91	MANUAL, INSTRUCTION (POLISH, RUSSIAN)(EE)
	3-798-438-11	MANUAL, INSTRUCTION (HUNGALIAN, CZECH) (EE)
	3-913-600-11	BELT (US, CND)
	3-919-802-01	CUSHION (CND, AEP, UK, E, IT, EA, EE)
*	3-921-164-01	INDIVIDUAL CARTON (CND)
*	3-921-166-01	INDIVIDUAL CARTON (AEP, UK, IT, EE)
*		

Ref. No.	Part No.	Description	Remark
*	3-921-168-01	INDIVIDUAL CARTON (E, EA)	
	8-952-216-94	HEADPHONE MDR-E215/Y SET	(AEP, UK, E, IT, EA, EE)
	8-953-580-90	HEADPHONE MDR-W07G SET (US, CND)	
	X-3369-992-1	CLIP ASSY, BELT	

9-960-098-11
(Including 9-960-098-81)

Sony Corporation
Consumer A&V Products Company
Personal A&V Products Div.

English
95C09113-1
Printed in Japan
© 1995. 3
Published by Home A&V Products Div.
Quality Engineering Dept.

WM-FS493/FS495

SONY

SERVICE MANUAL

US Model
WM-FS493/FS495

Canadian Model
AEP Model
UK Model
E Model
WM-FS493

SUPPLEMENT-2

File this supplement with the service manual.

Subject : 1. PARTS CHANGE
2. CIRCUIT CHANGE (DISPLAY BOARD)
3. CHANGE OF MAIN BOARD

(ECN-WM500632)

1. PARTS CHANGE

- The following parts have been changed as shown below.

☛: Changed portion

Page	FORMER				NEW			
	Ref. No	Part No	Description	Remark	Ref. No	Part No	Description	Remark
29			———————		81	3-925-165-01	SCREW (1.4X2.5)	

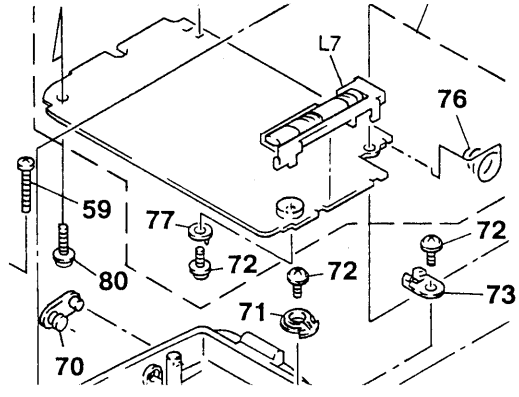

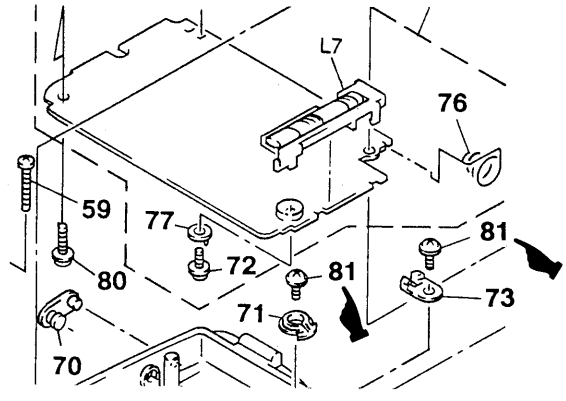

2. CIRCUIT CHANGE (DISPLAY BOARD)

DISPLAY

- As for DISPLAY board, the board has changed to suffix No.-13, but the mounting position is almost the same. The defference points are as below.

☛ : Changed portion

Page	FORMER							NEW						
	Ref. No	Part No	Description				Remark	Ref. No	Part No	Description				Remark
31			*** ELECTRICAL PARTS LIST ***							*** ELECTRICAL PARTS LIST ***				
			*** DISPLAY BOARD ***							*** DISPLAY BOARD ***				
	C713	1-163-109-00	CERAMIC CHIP	47PF	5%	50V	(FS495)	C713	1-163-141-00	CERAMIC CHIP	0.001uF	5%	50V	(FS495)
	C716	1-164-004-11	CERAMIC CHIP	0.1uF	10%	25V	(FS495)	C716	1-164-232-11	CERAMIC CHIP	0.01uF		50V	(FS495)
	C717	1-163-088-00	CERAMIC CHIP	5PF	5%	50V	(FS495)	C717	1-163-093-00	CERAMIC CHIP	10PF	5%	50V	(FS495)
	IC701	8-759-329-93	IC	uPD1724GB-688-1A7				IC701	8-759-336-40	IC	uPD1724GB-693-1A7			
	Q703	8-729-117-73	TRANSISTOR	2SC4178-F14			(FS495)	Q703	8-729-923-31	TRANSISTOR	2SC4083-P			(FS495)
	R704	1-216-085-00	METAL CHIP	33K	5%	1/10W	(FS495)	R704	1-216-081-00	METAL CHIP	22K	5%	1/10W	(FS495)
	R717	1-216-113-00	METAL CHIP	470K	5%	1/10W		R717	1-216-121-91	METAL GLAZE	1M	5%	1/10W	

3. CHANGE OF MAIN BOARD

• PRINTED WIRING BOARD — MAIN SECTION —

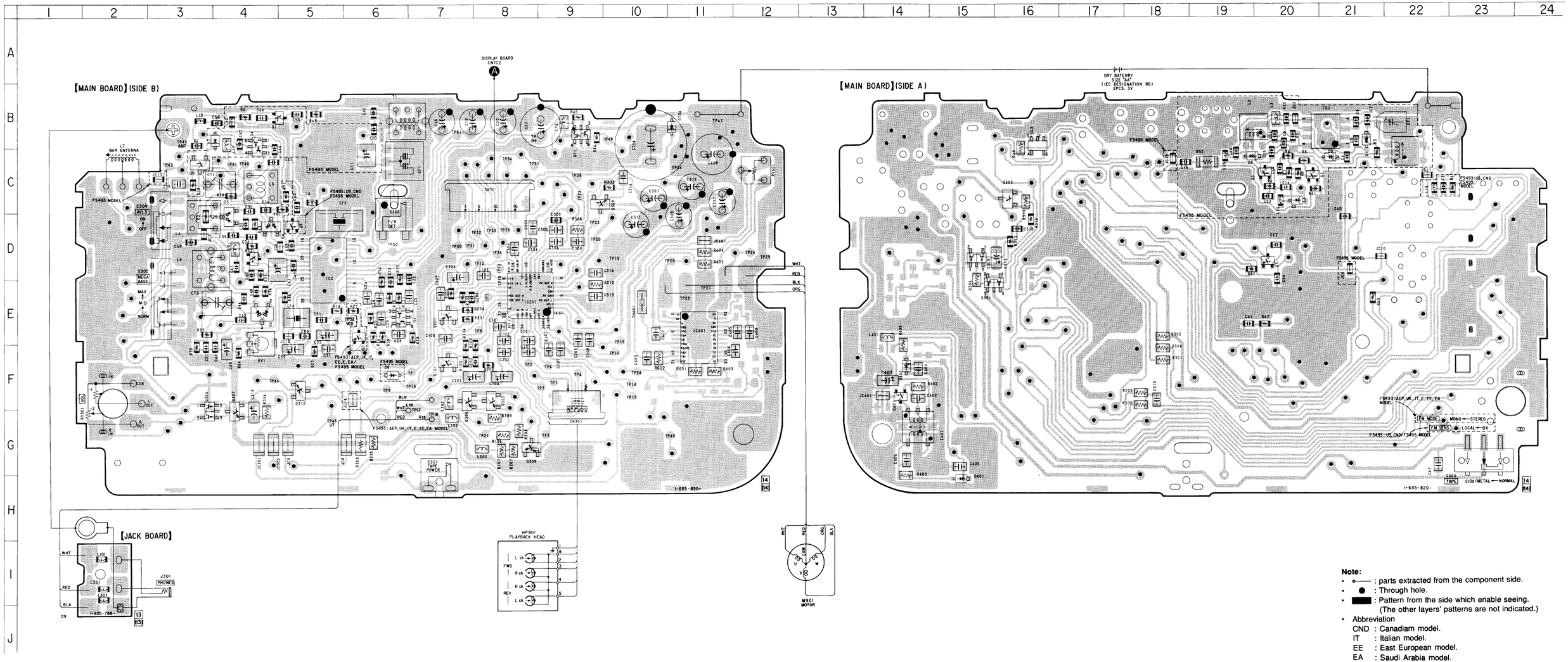

Note:

- ⊶ : parts extracted from the component side.
- ● : Through hole.
- ▬ : Pattern from the side which enable seeing. (The other layers' patterns are not indicated.)
- Abbreviation
  - CND : Canadiam model.
  - IT : Italian model.
  - EE : East European model.
  - EA : Saudi Arabia model.

• SCHEMATIC DIAGRAM — MAIN SECTION —

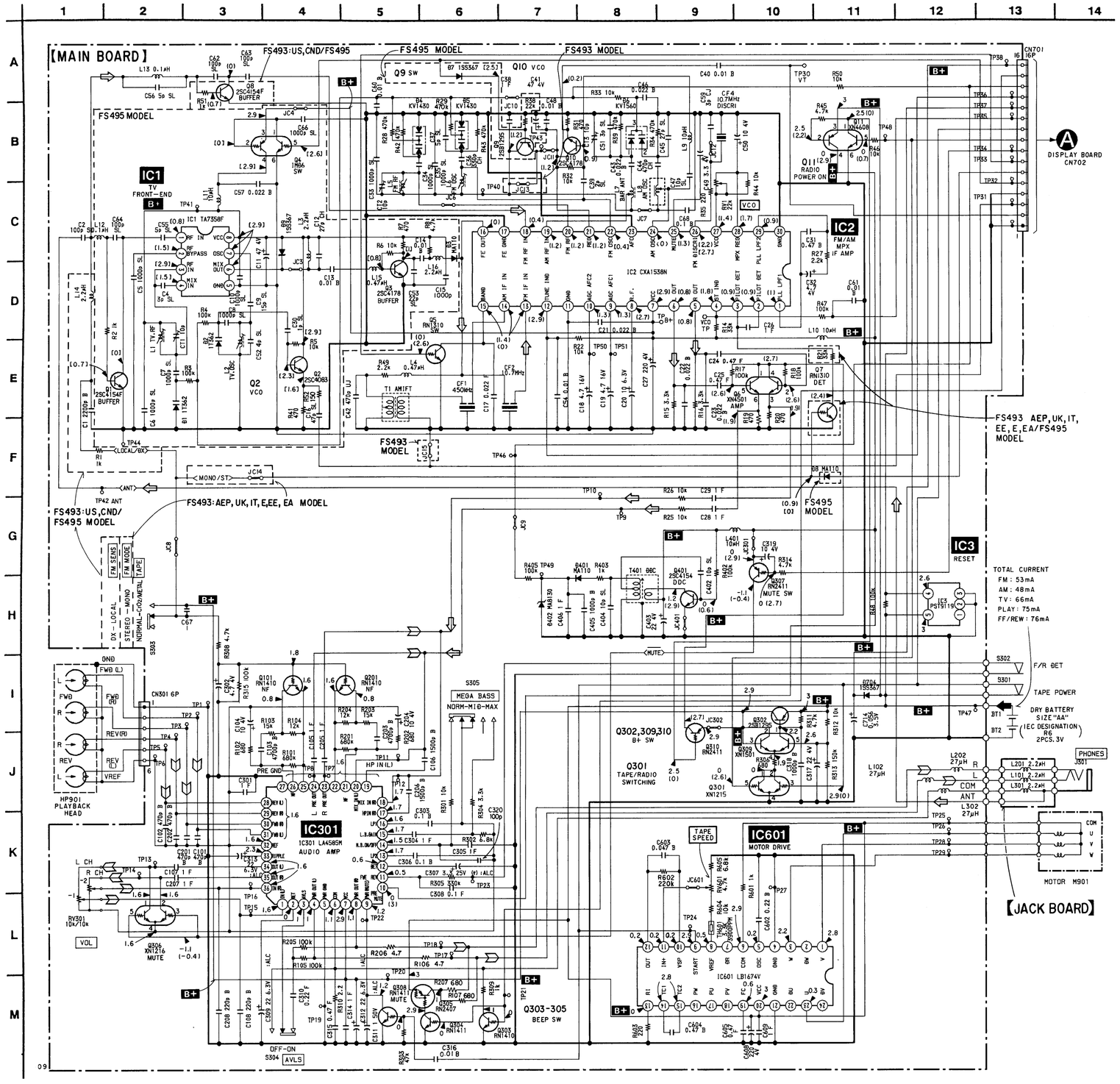

• IC BLOCK DIAGRAMS

IC1 TA7358F

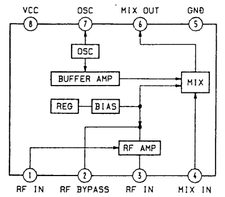

IC2 CX1538N

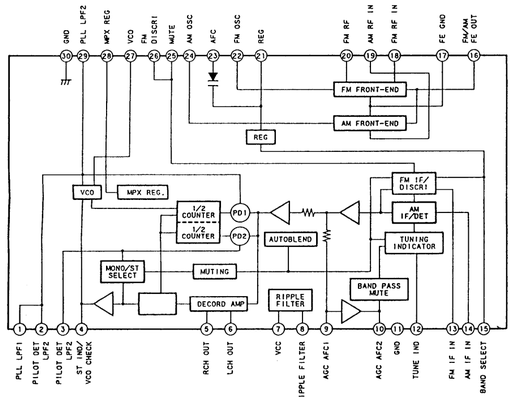

IC301 LA4585M

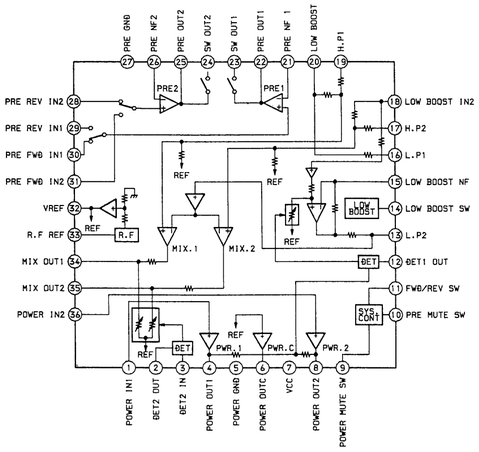

IC601 LB1674V

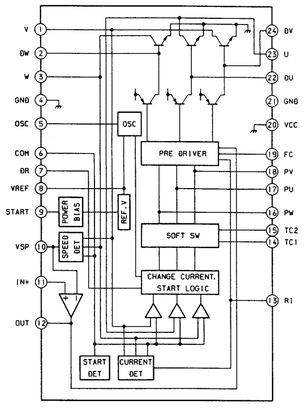

IC3 PST9119

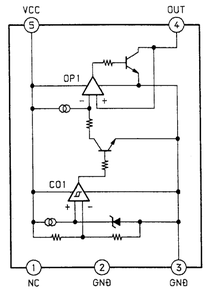

• Semiconductor Location

Ref. No.	Location
D1	C-21
D2	C-19
D3	C-20
D4	D-5
D5	C-4
D6	E-4
D7	B-3
D8	F-6
D9	C-21
D401	H-15
D402	F-14
D704	B-11
IC1	B-21
IC2	E-5
IC3	B-16
IC301	E-8
IC601	E-11
Q1	B-4
Q2	C-21
Q3	C-20
Q4	B-4
Q5	D-20
Q6	E-7
Q7	F-6
Q8	D-5
Q9	C-3
Q10	D-4
Q11	C-9
Q101	F-7
Q201	E-7
Q301	E-15
Q302	C-16
Q303	F-8
Q304	G-7
Q305	G-8
Q306	F-3
Q307	F-4
Q308	C-10
Q309	D-15
Q310	F-5
Q401	F-14

Note:
- ⊶ : parts extracted from the component side.
- ● : Through hole.
- △ : internal component.
- ▒ : Pattern from the side which enable seeing. (The other layers' patterns are not indicated.)
- Abbreviation
  - CND : Canadiam model.
  - IT : Italian model.
  - EE : East European model.
  - EA : Saudi Arabia model.

Note:
- All capacitors are in μF unless otherwise noted. pF:μμF 50WV or less are not indicated except for electrolytics and tantalums.
- All resistors are in Ω and 1/4W or less unless otherwise specified.
- ▭ : panel designation.
- **B+** : B+ Line
- ▭ : adjustment for repair.

- Voltage and waveforms are dc with respect to ground under no-signal conditions.
  no mark : TAPE PLAY
  ( ) : FM
  < > : AM
  [ ] : TV (13ch)
- Voltages are taken with a VOM (Input impedance 10MΩ). Voltage variations may be noted due to normal production tolerances.
- Power voltage is dc 3.0V and fed with regulated dc power supply from BATTERY TERMINAL.
- Total current is measured with no cassette installed.
- Signal path.
  ⇨ : FM
  ⇧ : PB
- Abbreviation
  - CND : Canadian model.
  - IT : Italian model.
  - EE : East European model.
  - EA : Saudi Arabia model.

MAIN

ELECTRICAL PARTS LIST

NOTE:
- Due to standardization, replacements in the parts list may be different from the parts specified in the diagrams or the components used on the set.
- Items marked "*" are not stocked since they are seldom required for routine service. Some delay should be anticipated when ordering these items.
- RESISTORS
  All resistors are in ohms
  METAL: Metal-film resistor
  METAL OXIDE: Metal Oxide-film resistor
  F : nonflammable
- SEMICONDUCTORS
  In each case, u: μ , for example:
  uA...: μA..., uPA...: μPA..., uPB...: μPB..., uPC...: μPC..., uPD...: μPD...
- CAPACITORS
  uF : μF
- COILS
  uH : μH
- Abbreviation
  CND : Canadian model
  IT : Italian model
  EE : East European model
  EA : Saudi Arabia model

Ref. No.	Part No.	Description				Remark
	A-3016-691-A	MAIN BOARD, COMPLETE (FS493:US, CND)				
		**********				
	A-3016-695-A	MAIN BOARD, COMPLETE				
		(FS493:AEP, UK, IT, EE, E, EA)				
		**********				
	A-3016-700-A	MAIN BOARD, COMPLETE (FS495)				
		**********				
	3-318-201-01	SCREW (B)(1.4X3), TAPPING				
*	3-921-876-01	JOINT (B)				
	3-921-877-01	SPRING, BATTERY COIL				
	3-921-878-01	TERMINAL BOARD, BATTERY				
		< CAPACITOR >				
C1	1-162-966-11	CERAMIC CHIP	0.0022uF	10%	50V	
					(FS493:US, CND/FS495)	
C2	1-162-953-11	CERAMIC CHIP	100PF	5%	50V	
C4	1-162-934-11	CERAMIC CHIP	3PF	0.25PF	50V(FS495)	
C5	1-164-357-11	CERAMIC CHIP	1000PF	5%	50V(FS495)	
C6	1-164-357-11	CERAMIC CHIP	1000PF	5%	50V(FS495)	
C7	1-164-357-11	CERAMIC CHIP	1000PF	5%	50V(FS495)	
C8	1-164-357-11	CERAMIC CHIP	1000PF	5%	50V(FS495)	
C9	1-162-943-11	CERAMIC CHIP	15PF	5%	50V(FS495)	
C10	1-164-357-11	CERAMIC CHIP	1000PF	5%	50V(FS495)	
C11	1-104-908-11	TANTAL. CHIP	47uF	20%	4V (FS495)	
C12	1-162-920-11	CERAMIC CHIP	27PF	5%	50V(FS495)	
C13	1-162-970-11	CERAMIC CHIP	0.01uF	10%	25V(FS495)	
C14	1-162-970-11	CERAMIC CHIP	0.01uF	10%	25V(FS495)	
C15	1-164-357-11	CERAMIC CHIP	1000PF	5%	50V(FS495)	
C16	1-162-949-11	CERAMIC CHIP	47PF	5%	50V(FS495)	
C17	1-162-995-11	CERAMIC CHIP	0.022uF		50V	
C18	1-126-163-11	ELECT	4.7uF	20%	50V	
C19	1-126-163-11	ELECT	4.7uF	20%	50V	
C20	1-126-157-11	ELECT	10uF	20%	16V	
C21	1-164-227-11	CERAMIC CHIP	0.022uF	10%	25V	
C22	1-164-227-11	CERAMIC CHIP	0.022uF	10%	25V	
C23	1-164-227-11	CERAMIC CHIP	0.022uF	10%	25V	
C24	1-164-005-11	CERAMIC CHIP	0.47uF		25V	
C25	1-164-005-11	CERAMIC CHIP	0.47uF		25V	
C26	1-164-346-11	CERAMIC CHIP	1uF		16V	
C27	1-124-434-00	ELECT	220uF	20%	4V	
C28	1-164-346-11	CERAMIC CHIP	1uF		16V	
C29	1-164-346-11	CERAMIC CHIP	1uF		16V	
C30	1-162-930-11	CERAMIC CHIP	1PF	0.25PF	50V(FS495)	
C31	1-107-823-11	CERAMIC CHIP	0.47uF	10%	16V	
C32	1-135-151-21	TANTALUM CHIP	4.7uF	20%	4V	
C33	1-164-357-11	CERAMIC CHIP	1000PF	5%	50V	
C34	1-164-357-11	CERAMIC CHIP	1000PF	5%	50V	
C35	1-164-357-11	CERAMIC CHIP	1000PF	5%	50V	
C36	1-162-959-11	CERAMIC CHIP	330PF	5%	50V	
C37	1-162-936-11	CERAMIC CHIP	5PF	0.25PF	50V	
C38	1-164-346-11	CERAMIC CHIP	1uF		16V	
C39	1-162-932-11	CERAMIC CHIP	2PF	0.25PF	50V	
C40	1-162-970-11	CERAMIC CHIP	0.01uF	10%	25V	
C41	1-104-908-11	TANTAL. CHIP	47uF	20%	4V	
C42	1-164-362-11	CERAMIC CHIP	470PF	5%	50V	
C43	1-164-227-11	CERAMIC CHIP	0.022uF	10%	25V	
C44	1-164-315-11	CERAMIC CHIP	470PF	5%	50V	
C45	1-162-946-11	CERAMIC CHIP	27PF	5%	50V	
C46	1-164-227-11	CERAMIC CHIP	0.022uF	10%	25V	
C47	1-162-941-11	CERAMIC CHIP	10PF	0.5PF	50V	
C48	1-162-970-11	CERAMIC CHIP	0.01uF	10%	25V	
C49	1-135-180-21	TANTALUM CHIP	3.3uF	20%	6.3V	
C50	1-135-201-11	TANTALUM CHIP	10uF	20%	4V	
C51	1-162-934-11	CERAMIC CHIP	3PF	0.25PF	50V	
C52	1-162-935-11	CERAMIC CHIP	4PF	0.25PF	50V(FS495)	
C53	1-162-945-11	CERAMIC CHIP	22PF	5%	50V(FS495)	
C54	1-162-970-11	CERAMIC CHIP	0.01uF	10%	25V	
C55	1-162-936-11	CERAMIC CHIP	5PF	0.25PF	50V(FS495)	
C56	1-162-936-11	CERAMIC CHIP	5PF	0.25PF	50V	
C57	1-164-227-11	CERAMIC CHIP	0.022uF	10%	25V(FS495)	
C59	1-162-908-11	CERAMIC CHIP	3PF	0.25PF	50V	
C60	1-162-970-11	CERAMIC CHIP	0.01uF	10%	25V	
C61	1-162-970-11	CERAMIC CHIP	0.01uF	10%	25V	
C62	1-162-953-11	CERAMIC CHIP	100PF	5%	50V	
C63	1-162-953-11	CERAMIC CHIP	100PF	5%	50V	
C64	1-162-953-11	CERAMIC CHIP	100PF	5%	50V(FS495)	
C66	1-164-357-11	CERAMIC CHIP	1000PF	5%	50V(FS495)	
C67	1-164-346-11	CERAMIC CHIP	1uF		16V	
C68	1-107-826-11	CERAMIC CHIP	0.1uF	10%	16V	
C101	1-163-005-11	CERAMIC CHIP	470PF	10%	50V	
C102	1-163-005-11	CERAMIC CHIP	470PF	10%	50V	
C103	1-162-968-11	CERAMIC CHIP	0.0047uF	10%	50V	
C104	1-135-201-11	TANTALUM CHIP	10uF	20%	4V	
C105	1-164-346-11	CERAMIC CHIP	1uF		16V	

Ref. No.	Part No.	Description	Remark
C106	1-163-011-11	CERAMIC CHIP 0.0015uF 10% 50V	
C107	1-164-346-11	CERAMIC CHIP 1uF 16V	
C108	1-163-001-11	CERAMIC CHIP 220PF 10% 50V	
C201	1-163-005-11	CERAMIC CHIP 470PF 10% 50V	
C202	1-163-005-11	CERAMIC CHIP 470PF 10% 50V	
C203	1-162-968-11	CERAMIC CHIP 0.0047uF 10% 50V	
C204	1-135-201-11	TANTALUM CHIP 10uF 20% 4V	
C205	1-164-346-11	CERAMIC CHIP 1uF 16V	
C206	1-163-011-11	CERAMIC CHIP 0.0015uF 10% 50V	
C207	1-164-346-11	CERAMIC CHIP 1uF 16V	
C208	1-163-001-11	CERAMIC CHIP 220PF 10% 50V	
C301	1-164-346-11	CERAMIC CHIP 1uF 16V	
C302	1-135-151-21	TANTALUM CHIP 4.7uF 20% 4V	
C303	1-164-004-11	CERAMIC CHIP 0.1uF 10% 25V	
C304	1-164-346-11	CERAMIC CHIP 1uF 16V	
C305	1-164-346-11	CERAMIC CHIP 1uF 16V	
C306	1-164-004-11	CERAMIC CHIP 0.1uF 10% 25V	
C307	1-126-162-11	ELECT 3.3uF 20% 50V	
C308	1-163-038-91	CERAMIC CHIP 0.1uF 25V	
C309	1-126-153-11	ELECT 22uF 20% 6.3V	
C310	1-164-222-11	CERAMIC CHIP 0.22uF 25V	
C311	1-126-160-11	ELECT 1uF 20% 50V	
C312	1-126-153-11	ELECT 22uF 20% 6.3V	
C313	1-126-153-11	ELECT 22uF 20% 6.3V	
C314	1-164-346-11	CERAMIC CHIP 1uF 16V	
C315	1-164-005-11	CERAMIC CHIP 0.47uF 25V	
C316	1-164-232-11	CERAMIC CHIP 0.01uF 50V	
C317	1-104-847-11	TANTAL. CHIP 22uF 20% 4V	
C318	1-162-964-11	CERAMIC CHIP 0.001uF 10% 50V	
C319	1-135-201-11	TANTALUM CHIP 10uF 20% 4V	
C320	1-162-953-11	CERAMIC CHIP 100PF 5% 50V	
C402	1-163-093-00	CERAMIC CHIP 10PF 5% 50V	
C403	1-104-847-11	TANTAL. CHIP 22uF 20% 4V	
C404	1-163-093-00	CERAMIC CHIP 10PF 5% 50V	
C405	1-163-009-11	CERAMIC CHIP 0.001uF 10% 50V	
C406	1-164-346-11	CERAMIC CHIP 1uF 16V	
C602	1-164-489-11	CERAMIC CHIP 0.22uF 10% 16V	
C603	1-163-809-11	CERAMIC CHIP 0.047uF 10% 25V	
C604	1-107-823-11	CERAMIC CHIP 0.47uF 10% 16V	
C605	1-164-005-11	CERAMIC CHIP 0.47uF 25V	
C608	1-124-434-00	ELECT 220uF 20% 4V	
C609	1-164-346-11	CERAMIC CHIP 1uF 16V	
C714	1-125-639-11	CAPACITOR 56000uF 3.5V	
		< FILTER >	
CF1	1-579-823-21	FILTER, CERAMIC (450kHz)	
CF2	1-760-648-11	FILTER, CERAMIC (10.7MHz)	
CF4	1-577-065-21	FILTER, CERAMIC (10,7MHz)	

Ref. No.	Part No.	Description	Remark
		< CONNECTOR >	
CN301	1-766-819-11	CONNECTOR, FPC (ZIF) 6P	
CN701	1-766-584-11	CONNECTOR, FPC (ZIF) 16P	
		< TRIMMER >	
CT1	1-141-327-11	CAP, VAR, TRIMMER (CHIP TYPE)(FS495)	
CT2	1-141-463-11	CAP, ADJ	
CT3	1-141-463-11	CAP, ADJ	
		< DIODE >	
D1	8-713-100-11	DIODE 1T362 (FS495)	
D2	8-713-100-11	DIODE 1T362 (FS495)	
D3	8-719-404-46	DIODE MA110 (FS495)	
D4	8-719-032-80	DIODE KV1430-TL	
D5	8-719-032-80	DIODE KV1430-TL	
D6	8-719-951-05	DIODE KV1560	
D7	8-719-049-09	DIODE 1SS367-T3SONY (FS495)	
D8	8-719-404-46	DIODE MA110 (FS495)	
D9	8-719-049-09	DIODE 1SS367-T3SONY (FS495)	
D401	8-719-404-46	DIODE MA110	
D402	8-719-977-52	DIODE DTZ16A	
D704	8-719-049-09	DIODE 1SS367-T3SONY	
		< IC >	
IC1	8-759-339-49	IC TA7358F-N.SONY.EL (FS495)	
IC2	8-752-072-12	IC CXA1538N	
IC3	8-759-339-16	IC PST9119NL	
IC301	8-759-332-69	IC LA4585M-TLM	
IC601	8-759-275-47	IC LB1674V-TLM	
		< JUMPER RESISTOR >	
JC3	1-216-864-11	METAL CHIP 0 5% 1/16W (FS495)	
JC4	1-216-864-11	METAL CHIP 0 5% 1/16W (FS495)	
JC6	1-216-864-11	METAL CHIP 0 5% 1/16W	
JC7	1-216-864-11	METAL CHIP 0 5% 1/16W	
JC8	1-216-296-91	CONDUCTOR, CHIP (3216)	
JC9	1-216-296-91	CONDUCTOR, CHIP (3216)	
JC10	1-216-864-11	METAL CHIP 0 5% 1/16W	
JC11	1-216-864-11	METAL CHIP 0 5% 1/16W	
JC12	1-216-864-11	METAL CHIP 0 5% 1/16W	
JC13	1-216-864-11	METAL CHIP 0 5% 1/16W (FS493)	
JC14	1-216-295-91	CONDUCTOR, CHIP (2012) (FS493:AEP, UK, IT, EE, E, EA)	
JC15	1-216-864-11	METAL CHIP 0 5% 1/16W (FS493)	
JC301	1-216-296-91	CONDUCTOR, CHIP (3216)	
JC302	1-216-296-91	CONDUCTOR, CHIP (3216)	
JC401	1-216-295-91	CONDUCTOR, CHIP (2012)	
JC601	1-216-295-91	CONDUCTOR, CHIP (2012)	

MAIN

Ref. No.	Part No.	Description	Remark
		< COIL >	
L1	1-411-305-11	COIL (WITH CORE) (TV RF) (FS495)	
L2	1-411-306-21	COIL (WITH CORE) (TV OSC) (FS495)	
L3	1-410-997-31	INDUCTOR CHIP 2.2uH (FS495)	
L4	1-412-975-31	INDUCTOR 0.47uH	
L5	1-411-289-11	COIL (WITH CORE) (FM-RF)	
L6	1-411-288-11	COIL (WITH CORE) (FM-OSC)	
L7	1-501-760-11	ANTENNA, FERRITE-ROD (MW)	
L8	1-411-205-11	COIL (WITH CORE) (AM-OSC)	
L9	1-412-006-31	INDUCTOR CHIP 10uH	
L10	1-412-006-31	INDUCTOR CHIP 10uH	
L11	1-412-006-31	INDUCTOR CHIP 10uH (FS495)	
L12	1-412-967-31	INDUCTOR 0.1uH (FS495)	
L13	1-412-967-31	INDUCTOR 0.1uH	
L14	1-412-983-31	INDUCTOR 2.2uH (FS493:US, CND/FS495)	
L15	1-412-975-31	INDUCTOR 0.47uH (FS495)	
L16	1-412-983-31	INDUCTOR 2.2uH (FS495)	
L102	1-412-011-31	INDUCTOR CHIP 27uH	
L202	1-412-011-31	INDUCTOR CHIP 27uH	
L302	1-412-011-31	INDUCTOR CHIP 27uH	
L401	1-412-006-31	INDUCTOR CHIP 10uH	
		< TRANSISTOR >	
Q1	8-729-602-21	TRANSISTOR 2SC4154-F (FS495)	
Q2	8-729-923-31	TRANSISTOR 2SC4083-P (FS495)	
Q3	8-729-117-73	TRANSISTOR 2SC4178-F14 (FS495)	
Q4	8-729-925-52	TRANSISTOR IMD6 (FS495)	
Q5	8-729-029-10	TRANSISTOR DTC143TUA-T106	
Q6	8-729-402-81	TRANSISTOR XN4501	
Q7	8-729-029-10	TRANSISTOR DTC143TUA-T106 (FS493:AEP, UK, IT, EE, E, EA/FS495)	
Q8	8-729-602-21	TRANSISTOR 2SC4154-F(FS493:US, CND/FS49	
Q9	8-729-807-87	TRANSISTOR 2SB1295-UL6 (FS495)	
Q10	8-729-117-73	TRANSISTOR 2SC4178-F14	
Q11	8-729-402-16	TRANSISTOR XN4608	
Q101	8-729-027-56	TRANSISTOR DTC143TKA-T146	
Q201	8-729-027-56	TRANSISTOR DTC143TKA-T146	
Q301	8-729-403-17	TRANSISTOR XN1215	
Q302	8-729-807-86	TRANSISTOR 2SB1295-UL5	
Q303	8-729-027-56	TRANSISTOR DTC143TKA-T146	
Q304	8-729-027-60	TRANSISTOR DTC144TKA-T146	
Q305	8-729-027-26	TRANSISTOR DTA114YKA-T146	
Q306	8-729-421-23	TRANSISTOR XN1216	
Q307	8-729-027-24	TRANSISTOR DTA114TKA-T146	
Q308	8-729-027-60	TRANSISTOR DTC144TKA-T146	
Q309	8-729-402-13	TRANSISTOR XN1501	
Q310	8-729-027-24	TRANSISTOR DTA114TKA-T146	
Q401	8-729-602-21	TRANSISTOR 2SC4154-F	

Ref. No.	Part No.	Description	Remark
		< RESISTOR >	
R1	1-216-821-11	METAL CHIP 1K 5% 1/16W (FS493:US, CND/FS495)	
R2	1-216-821-11	METAL CHIP 1K 5% 1/16W (FS495)	
R3	1-216-845-11	METAL CHIP 100K 5% 1/16W (FS495)	
R4	1-216-845-11	METAL CHIP 100K 5% 1/16W (FS495)	
R5	1-216-833-11	METAL CHIP 10K 5% 1/16W (FS495)	
R6	1-216-833-11	METAL CHIP 10K 5% 1/16W (FS495)	
R7	1-216-817-11	METAL CHIP 470 5% 1/16W (FS495)	
R8	1-216-829-11	METAL CHIP 4.7K 5% 1/16W (FS495)	
R14	1-216-839-11	METAL CHIP 33K 5% 1/16W	
R15	1-216-827-11	METAL CHIP 3.3K 5% 1/16W	
R16	1-216-827-11	METAL CHIP 3.3K 5% 1/16W	
R17	1-216-845-11	METAL CHIP 100K 5% 1/16W	
R18	1-216-845-11	METAL CHIP 100K 5% 1/16W	
R19	1-216-817-11	METAL CHIP 470 5% 1/16W	
R20	1-216-817-11	METAL CHIP 470 5% 1/16W	
R21	1-216-839-11	METAL CHIP 33K 5% 1/16W (FS493:AEP, UK, IT, EE, EA/FS495)	
R22	1-216-833-11	METAL CHIP 10K 5% 1/16W	
R25	1-216-833-11	METAL CHIP 10K 5% 1/16W	
R26	1-216-833-11	METAL CHIP 10K 5% 1/16W	
R27	1-216-825-11	METAL CHIP 2.2K 5% 1/16W	
R28	1-216-853-11	METAL CHIP 470K 5% 1/16W	
R29	1-216-853-11	METAL CHIP 470K 5% 1/16W	
R31	1-216-817-11	METAL CHIP 470 5% 1/16W	
R32	1-216-833-11	METAL CHIP 10K 5% 1/16W	
R33	1-216-833-11	METAL CHIP 10K 5% 1/16W	
R34	1-216-853-11	METAL CHIP 470K 5% 1/16W	
R35	1-216-813-11	METAL CHIP 220 5% 1/16W	
R38	1-216-837-11	METAL CHIP 22K 5% 1/16W (FS495)	
R39	1-216-853-11	METAL CHIP 470K 5% 1/16W	
R41	1-216-817-11	METAL CHIP 470 5% 1/16W (FS495)	
R42	1-216-853-11	METAL CHIP 470K 5% 1/16W	
R43	1-216-853-11	METAL CHIP 470K 5% 1/16W	
R44	1-216-833-11	METAL CHIP 10K 5% 1/16W	
R45	1-216-829-11	METAL CHIP 4.7K 5% 1/16W	
R46	1-216-833-11	METAL CHIP 10K 5% 1/16W	
R47	1-216-845-11	METAL CHIP 100K 5% 1/16W	
R48	1-216-097-91	METAL GLAZE 100K 5% 1/10W	
R49	1-216-825-11	METAL CHIP 2.2K 5% 1/16W	
R50	1-216-833-11	METAL CHIP 10K 5% 1/16W	
R51	1-216-821-11	METAL CHIP 1K 5% 1/16W (FS493:US, CND/FS495)	
R52	1-216-178-00	METAL GLAZE 150 5% 1/8W (FS495)	
R101	1-216-855-11	METAL CHIP 680K 5% 1/16W	
R102	1-216-819-11	METAL CHIP 680 5% 1/16W	
R103	1-216-835-11	METAL CHIP 15K 5% 1/16W	
R104	1-216-834-11	METAL CHIP 12K 5% 1/16W	
R105	1-216-097-91	METAL GLAZE 100K 5% 1/10W	

Ref. No.	Part No.	Description				Remark
R106	1-216-308-00	METAL CHIP	4.7	5%	1/10W	
R107	1-216-045-00	METAL CHIP	680	5%	1/10W	
R201	1-216-855-11	METAL CHIP	680K	5%	1/16W	
R202	1-216-819-11	METAL CHIP	680	5%	1/16W	
R203	1-216-835-11	METAL CHIP	15K	5%	1/16W	
R204	1-216-834-11	METAL CHIP	12K	5%	1/16W	
R205	1-216-097-91	METAL GLAZE	100K	5%	1/10W	
R206	1-216-308-00	METAL CHIP	4.7	5%	1/10W	
R207	1-216-045-00	METAL CHIP	680	5%	1/10W	
R301	1-216-073-00	METAL CHIP	10K	5%	1/10W	
R302	1-216-069-00	METAL CHIP	6.8K	5%	1/10W	
R303	1-216-841-11	METAL CHIP	47K	5%	1/16W	
R304	1-216-061-00	METAL CHIP	3.3K	5%	1/10W	
R305	1-216-109-00	METAL CHIP	330K	5%	1/10W	
R306	1-216-045-00	METAL CHIP	680	5%	1/10W	
R308	1-216-214-00	METAL GLAZE	4.7K	5%	1/8W	
R309	1-216-049-91	METAL GLAZE	1K	5%	1/10W	
R310	1-216-298-00	METAL CHIP	2.2	5%	1/10W	
R311	1-216-065-00	METAL CHIP	4.7K	5%	1/10W	
R312	1-216-833-11	METAL CHIP	10K	5%	1/16W	
R313	1-216-847-11	METAL CHIP	150K	5%	1/16W	
R314	1-216-065-00	METAL CHIP	4.7K	5%	1/10W	
R315	1-216-097-91	METAL GLAZE	100K	5%	1/10W	
R402	1-216-097-91	METAL GLAZE	100K	5%	1/10W	
R403	1-216-049-91	METAL GLAZE	1K	5%	1/10W	
R405	1-216-097-91	METAL GLAZE	100K	5%	1/10W	
R601	1-216-049-91	METAL GLAZE	1K	5%	1/10W	
R602	1-216-105-91	METAL GLAZE	220K	5%	1/10W	
R603	1-216-033-00	METAL CHIP	220	5%	1/10W	
R604	1-216-073-00	METAL CHIP	10K	5%	1/10W	
R605	1-216-069-00	METAL CHIP	6.8K	5%	1/10W	
		< VARIABLE RESISTOR >				
RV1	1-223-873-11	RES, ADJ, METAL GLAZE22K				
RV301	1-230-593-11	RES, VAR, CARBON 10K/10K (VOL)				
RV601	1-241-916-11	RES, ADJ, CARBON 4.7K				
		< SWITCH >				
S301	1-762-302-11	SWITCH, PUSH (1 KEY)(TAPE POWER)				
S302	1-572-288-11	SWITCH, PUSH (F/R DET)				
S303	1-572-272-11	SWITCH, SLIDE (TAPE, FM SENS, FM MODE)				
S304	1-570-397-11	SWITCH, SLIDE (AVLS)				
S305	1-570-113-11	SWITCH, SLIDE (MEGA BASS)				
		< TRANSFORMER >				
T1	1-411-210-11	COIL (WITH CORE)(AM-IFT)				
T401	1-450-306-11	TRANSFORMER, DC-DC CONVERTER				
		< THERMISTOR >				
TH601	1-810-794-11	THERMISTOR, POSITIVE				

Ref. No.	Part No.	Description	Remark

English
96F0990-1
Printed in Japan
© 1996. 6
Published by Quality Engineering Dept.
(Shibaura)

9-960-098-82

Sony Corporation
Personal A&V Products Company